iGarden

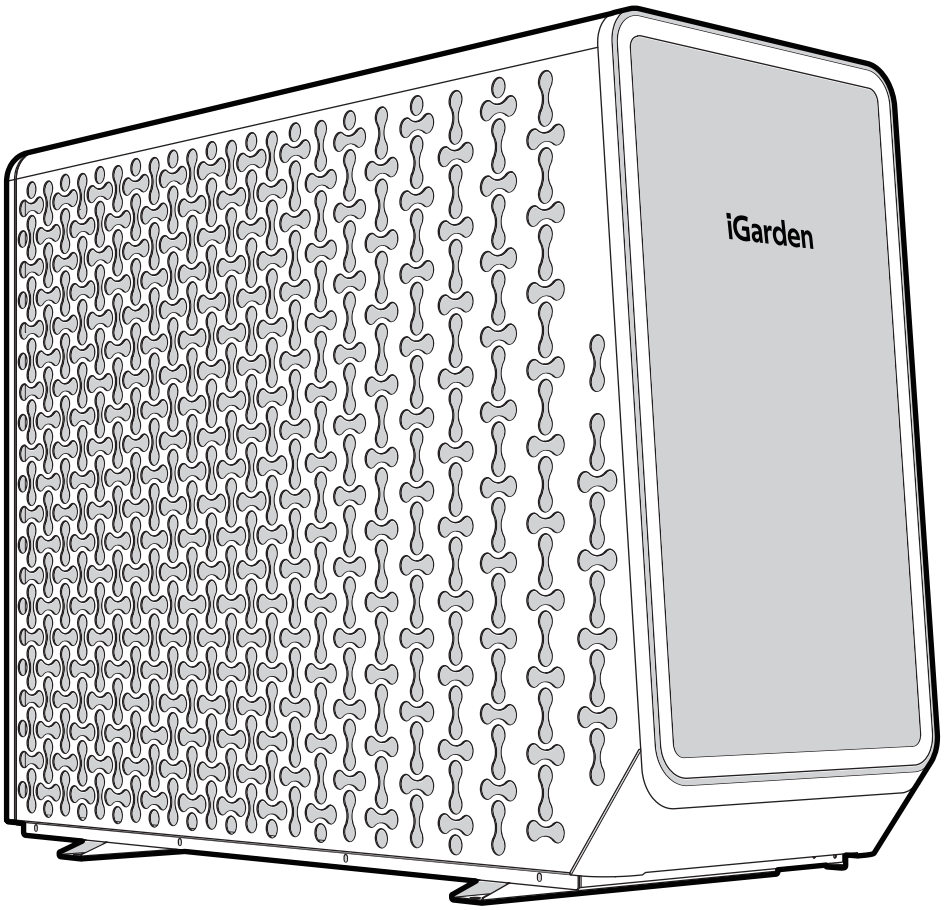

iGarden R-290 ATW Heat Pump X7

USER MANUAL

Please read this manual carefully before installing and operating your ATW Heat Pump, and keep this manual for future reference to ensure safe and effective use.

Contents

1 Safety Precautions 4
1.1 Meaning of warnings and symbols 4
1.2 General 5
1.3 Refrigerant-R290 8
1.4 Electrical 10
2 Product Description 12
2.1 Intended use 12
2.2 Heat pump system 13
2.3 Description of the product 13
2.4 Working principle of the heat pump 13
2.5 Product design 14
2.6 Nameplate and serial number 15
3 Protective Zone and Drainage 15
3.1 Protective zone 15
3.1.1 Protective zone for ground installation 16
3.1.2 Protective zone for wall installation 18
3.1.3 Protective zone for flat-roof installation 20
3.2 Drainage 22
3.2.1 Design of the condensate discharge for ground installation 22
3.2.2 Design of the condensate discharge for ground installation 22
3.2.3 Design of the condensate discharge for flat roof installation 22
4 About The Unit 23
4.1 Features 23
4.1.1 Intelligent control 23
4.1.2 Excellent performance 23
4.1.3 Quiet Running 23
4.1.4 High heat exchange rate 23
4.1.5 Large Working Range 23
4.1.6 Intelligent temperature control 23
4.1.7 EMS and SG ready 23
4.1.8 Real-time energy consumption monitoring 23
4.2 Dimension (mm) 24
4.3 Accessory List 27
5 Display Operation Guide 28
5.1 Main Interface 30
5.1.1 ON/OFF 32
5.1.2 Adjusting Temperature 32
5.1.3 Air conditioning mode settings 33
5.1.4 Screen unlock 33
5.1.5 Power Mode Settings 34
5.2 Main menu 34
5.2.1 Analog Input Query Interface 35
5.2.2 Load Output Query Interface 36

5.3 Display Setting 37
5.3.1 Language Setting 37
5.3.2 Brightness setting 37
5.3.3 Screen saver 38
5.3.4 Alarm Sound Setting 38
5.3.5 Keypad buzzer 39
5.4 Time and Date 39
5.5 Timer setting 39
5.5.1 Timer on/off 40
5.5.2 Disinfection Function 42
5.5.3 Silent timer 43
5.5.4 DHW Pump Timer 43
5.6 WiFi Setup 44
5.7 User Parameter Settings 44
5.8 Manual Defrost 46
5.9 Force Open Function 47
5.9.1 Floor Heating Drying Function 47
5.9.2 Forced open auxiliary electric heater 47
5.9.3 Force open water tank heater 47
5.9.4 Forced open DHW mode 47
5.9.5 Force open external heat source 47
5.10 Holiday Mode 48
5.10.1 Holiday Away Mode 48
5.10.2 Holiday Stay-at-Home Mode 48
5.11 Fault Inquiry Interface 49
5.11.1 Current fault 49
5.11.2 Historical faults 50
5.12 Zone Settings 50
5.13 Power consumption 51
6 Wiring Diagram 52
6.1 iGXC08 52
6.2 iGXC11 53
6.3 iGXC11T 54
6.4 iGXC13 55
6.5 iGXC13T 56
6.6 iGXC16 57
6.7 iGXC16T 58
7 Care and Maintenance 59
7.1 Keeping the product clear 59
7.2 Cleaning the product 59
7.3 Carrying out maintenance work 59
8 Troubleshooting 59
8.1 Solving problems based on symptoms 59
8.1.1 Symptom: The unit is NOT heating or cooling as expected 59
8.1.2 Symptom: Hot water does NOT reach the desired temperature 60
8.1.3 Symptom: The compressor does NOT start 60

8.1.4 Symptom: The system is making gurgling noises after commissioning 60
8.1.5 Symptom: The pump is making noise (cavitation) 60
8.1.6 Symptom: The pressure relief valve opens 61
8.1.7 Symptom: The water pressure relief valve leaks 61
8.1.8 Symptom: Insufficient space heating capacity at low outdoor temperature. 61
8.1.9 Symptom: The pressure at the tapping point is temporarily unusually high. 61
8.2 Troubleshooting Based on error codes 62
9 Decommissioning 70
9.1 Temporarily decommissioning the product 70
9.2 Permanently decommissioning the product 70
10 Recycling and Disposal 70
10.1 Disposing of the packaging 70
10.2 Disposing of the product 70
10.3 Disposing of batteries 70
10.4 Deleting personal data 70
Appendix 1 71

1 Safety Precautions

1.1 Meaning of warnings and symbols



DANGER

Indicates a high-risk situation that may lead to death or serious injury.



DANGER: RICK OF ELECTROCUTION

Indicates a situation which may lead to electric shock.



DANGER: RICK OF EXPLOSION

Indicates a situation which may lead to an explosion.



DANGER: RICK OF BURNING/SCALDING

Indicates a situation that may lead to burning/scalding due to extremely hot or cold temperatures.



WARNING

Indicates a situation that may lead to death or serious injury.



WARNING: FLAMMABLE MATERIAL

This symbol shows that this appliance used a flammable refrigerant. If the refrigerant is leaked and exposed to an external ignition source, there is a risk of fire.



CAUTION

Indicates a situation that may lead to mild to moderate injuries.



NOTICE

Indicates a situation that could result in equipment or property damage.



INFORMATION

Indicates useful tips or additional information.

Symbol	Description
	This symbol shows that information is available such as the operating manual or installation manual.
	This symbol shows that only a competent service personnel should be handling this equipment with reference to the technical manual.
	This symbol shows that the manual should be read carefully.
	This symbol shows that the unit contains rotating parts. Be careful when servicing or inspecting the unit.

1.2 General

- Please carefully read the following “Safety Precautions” when installation, service, maintenance, repair and decommissioning of appliances using flammable refrigerant.
- This appliance employed A3 flammable refrigerant R290 and shall be stored in such a way that it does not cause mechanical damage.
- The precautions specified here must be observed as they contain important safety-related information. The meaning of each indication used is shown below. Incorrect installation resulting from disregarding or neglecting the instructions may cause injury or damage, the severity of which is classified according to the following indications.
- If you are in doubt about the installation process or operation, please contact your authorized distributor for advice and information.

 **DANGER**
1. These instructions are exclusively intended for qualified contractors and authorized installers.
2. Work on the refrigerant circuit with flammable refrigerant in safety group A3 may only be carried out by authorized heating contractors. These heating contractors must be trained in accordance with EN 378 Part 4 or IEC 60335-2-40, Section HH. The certificate of competence from an industry accredited body is required.
3. Brazing/soldering work on the refrigerant circuit may only be carried out by personnel certified in accordance with ISO 13585 and AD 2000, Datasheet HP 100 R. And only contractors qualified and certified for the processes can perform brazing/soldering work. The work must fall within the range of applications purchased and be carried out in accordance with the prescribed procedures. Soldering/brazing work on accumulator connections requires certification of personnel and processes by a notified body according to the Pressure Equipment Directive (2014/68/EU).
4. Only a qualified electrician can perform the work on the electrical equipment.
5. Risk of explosion: The leakage of refrigerant can create a combustible or explosive atmosphere in the surrounding air. The following precautions shall be taken to prevent fire and explosion within the security area: – Keep ignition sources away from naked fires, plug sockets, hot surfaces, light switches, lamps, electric appliances that do not have an ignition source, mobile appliances with built-in batteries (for example, cell phones and fitness watches). – Do not use any sprays or other flammable gases in the safe area.
6. Contact with live components can lead to serious injuries. Some components on PCBs may remain live even after the power supply is turned off. Before removing the appliance covers, wait at least 4 minutes to allow the voltage to drop completely.

– Prevent the system from being reconnected.
– Wear appropriate personal protective equipment when performing any work.
– Never touch switches or electrical parts with wet fingers, as this could cause electric shock and damage the system.

7. Hot surfaces and fluids can cause burns or scalds, while cold surfaces may lead to frostbite.
– Before performing servicing or maintenance, turn off the equipment and let it cool down or warm up.
– Do not touch hot or cold surfaces on the appliance, its fittings, or pipework.

8. Escaping refrigerant may cause fires and explosions, potentially leading to severe injuries or even death.
- Do not drill into or apply heat to a refrigerant circuit that contains refrigerant.
- Do not operate Schrader valves unless a fill valve or extraction equipment is connected. Take steps to prevent electrostatic charges.
- Do not smoke. Avoid open flames and sparks. Never switch lights or electrical appliances on or off in environments where open flames or sparks are present.
- Components that contain or have contained refrigerant must be labeled and stored in well-ventilated areas, following relevant regulations and standards.

9. Direct contact with liquid or gaseous refrigerant can cause serious health harm, such as frostbite and/or burns. Inhaling liquid or gaseous refrigerant also carries a risk of asphyxiation.
- Avoid direct contact with liquid or gaseous refrigerant.
- Wear personal protective equipment when handling liquid or gaseous refrigerant.
- Never inhale refrigerant vapor.

10. The hot or cold metallic surfaces of the refrigerant circuit can cause burns or frostbite upon skin contact. Wear personal protective equipment to guard against such injuries.

11. Damage to the refrigerant circuit can allow refrigerant to enter the hydraulic system. After completing the work, properly vent the hydraulic system. When doing so, ensure the area is adequately ventilated.

12. Refrigerant leaks can cause fires and explosions, potentially resulting in severe injuries or death. Inhaling refrigerant may also lead to asphyxiation.
- Ensure excellent ventilation, particularly in the floor area around the outdoor unit.
- Do not smoke. Avoid open flames and sparks. Never switch lights or electrical appliances on or off in environments where open flames or sparks are present.
- From a safe location, turn off the power supply for all system components.
- Remove ignition sources from the hazardous area.
- System users should be aware that no ignition sources may be brought into the hazardous area during repairs.
- Repair work must be performed by an authorized contractor.
- Do not recommission the system until it has been repaired.



WARNING

1. Do not use any methods to accelerate defrosting or clean the appliance other than those recommended by the manufacturer.

2. The appliance shall be stored in a room with no continuously operating ignition sources (such as open flames, a running gas appliance, or a running electric heater).

3. Be aware that refrigerants might not contain an odour.

4. Any work procedure that affects safety devices shall only be carried out by competent persons. Examples of such work procedures include:
– Breaking into the refrigeration circuit;

– Opening sealed components; – Opening ventilated enclosures.
5. Protective devices, piping, and fittings shall be protected to the greatest extent possible against adverse environmental effects, such as the risk of water pooling and freezing in relief pipes, or the buildup of dirt and debris.
 **CAUTION**
1. Servicing shall be carried out only as recommended by the manufacturer.
2. Oxygen-free nitrogen (OFN) shall be purged through the system both before and during the brazing process.
3. An inert gas—specifically dry oxygen-free nitrogen (OFN)—shall be used to flush the system to render the unit safe. This process may need to be repeated several times.
4. This operation is absolutely critical when performing brazing work on the pipework.
5. Any form of improper use is prohibited: – Do not rinse the unit. – Do not place any objects or equipment on top of the unit (top plate). – Do not climb, sit, or stand on top of the unit.
6. Permissible tools: All tools used in the safety zone must be designed and explosion-protected in compliance with applicable standards and regulations for refrigerants in safety groups A2L and A3. Examples include brushless machines (such as cordless tools, disposal containers, installation aids, and screwdrivers), extraction equipment, vacuum pumps, conductive hoses, and non-sparking mechanical tools.
7. Tools must also be suitable for the pressure ranges in use and maintained in proper working condition. – Electrical equipment must meet the requirements for explosive-risk areas (Zone 2). – Do not use flammable materials such as sprays or other flammable gases. Before starting work, discharge static electricity by touching earthed objects (e.g., heating or water pipes). – Do not remove, block, or bridge safety devices. – No modifications are permitted: Do not alter the outdoor unit, inlet/outlet lines, electrical connections/cables, or surrounding areas. Do not remove any components or seals.
8. When working on systems using flammable refrigerants, technicians should identify certain locations as “temporary flammable zones.” These are typically areas where refrigerant emissions are expected during normal operations (e.g., recovery, charging, or evacuation), such as points where hoses are connected or disconnected.
9. In case of accidental refrigerant release that could form a flammable mixture with air, technicians must ensure a 3-meter safety working area (with the unit as the center).
10. For the primary water circulation Ambient: – Do not install air vent valves indoors. If indoor installation is unavoidable, ensure no ignition sources are present near the valve. – Ensure the outlet of the indoor safety valve leads outdoors, with no ignition sources nearby.
11. For the secondary water circulation Ambient (e.g., domestic hot water/DHW Ambient): Follow general rules for installing air vent valves and safety valves. For outdoor installations, two scenarios must be considered to prevent system damage, refrigerant releases, and other adverse effects: – Equipment located in public-access areas; – Equipment located in restricted areas, accessible only to authorized personnel.
12. Freezing can damage the heat pump. – Thermally insulate all hydraulic lines.

– Antifreeze may be added to the secondary circuit in compliance with local regulations and standards.
13. Repairing components with safety functions may compromise the system's safe operation. – Replace faulty components only with genuine manufacturer-supplied spare parts. – Do not repair inverters; replace them if defective. – Repair work must not be performed on-site. Units should be repaired at a designated location.

1.3 Refrigerant-R290

 **DANGER: RICK OF EXPLOSION**
Pump down-Refrigerant leakage. If you want to pump down the system, and there is a leak in the refrigerant circuit: – Do NOT use the unit's automatic pump down function, which is designed to collect all refrigerant from the system into the outdoor unit. **Possible consequence**: Self-combustion and explosion of the compressor because of air going into the operating compressor. – Use a separate recovery system to avoid operating the unit's compressor.
 **DANGER**
1. Due to lower working pressure than that of R32 or R410A refrigerants, some pipes and installation and service tools are specialized.
2. Mixing different refrigerants in a system is prohibited.
3. Ensure no foreign substances (such as oil, water, etc.) enter the piping.
4. Operation, maintenance, repair, and refrigerant recovery must be performed by trained and certified personnel familiar with the use of flammable refrigerants, as recommended by the manufacturer. Any individual operating, servicing, or maintaining the system or its associated parts must be trained and certified.
5. No part of the refrigeration circuit (including evaporators, air coolers, AHUs, condensers, or liquid receivers) or piping shall be positioned near heat sources, open flames, operating gas appliances, or operating electric heaters.
6. The user/owner or their authorized representative shall regularly inspect alarms, mechanical ventilation, and detectors—at least once a year (in accordance with national regulations)—to ensure they function properly.
7. A logbook must be maintained, and the results of these inspections shall be recorded in it.
8. Ventilation in occupied spaces shall be inspected to confirm there are no obstructions.
9. Before a new refrigeration system is put into service, the person responsible for commissioning the system must ensure that trained and certified operators receive instruction (based on the instruction manual) on the system's construction, supervision, operation, and maintenance, as well as the safety measures to be observed. They must also be familiarized with the properties and handling methods of the refrigerant used.
10. Trained and certified personnel must meet the following general requirements: – Knowledge of laws, regulations, and standards related to flammable refrigerants; – Detailed knowledge and skills in handling flammable refrigerants, using personal protective equipment, preventing refrigerant leaks, handling cylinders, charging, leak detection, recovery, and disposal; – Ability to understand and apply national laws, regulations, and standards in practice;

– Participation in regular ongoing training to maintain this expertise.
11. Protect the refrigeration system from accidental damage (e.g., rupture) caused by moving furniture or renovation activities.
12. To ensure tightness, technicians must test field-fabricated refrigerant joints for leaks indoors using a method with a sensitivity of 5 grams per year or better. Testing shall be conducted at a pressure of at least 0.25 times the maximum allowable pressure (>1.04 MPa, maximum 4.15 MPa), with no leakage permitted.
13. Take adequate precautions against refrigerant leaks. If refrigerant gas leaks, ventilate the area immediately. Potential risks include: – Excessive refrigerant concentration in an enclosed space may cause oxygen depletion; – Toxic gases may form if refrigerant gas comes into contact with fire.
14. Refrigerant must always be recovered; do not release it directly into the environment. Use a vacuum pump to evacuate the installation.
15. Ensure no oxygen is present in the system. Refrigerant may only be charged after completing the leak test and vacuum drying. **Possible consequence**: Self-combustion and explosion of the compressor because of oxygen going into the operating compressor.
16. Immediately close the refrigerant tank valve when finishing or pausing the charging process. Failure to close the valve promptly may result in additional refrigerant being charged due to residual pressure. **Possible consequence**: Incorrect refrigerant amount.
NOTICE
1. If recharging is required, refer to the unit's nameplate, which specifies the refrigerant type and required quantity.
2. To prevent compressor failure, do not charge more refrigerant than the specified amount.
3. When opening the refrigerant system, refrigerant must be handled in compliance with applicable laws and regulations.
4. Ensure refrigerant piping installation meets applicable regulations. In Europe, the relevant standard is EN378.
5. Ensure field piping and connections are not subjected to stress.
6. After all piping is connected, check for gas leaks using nitrogen for leak detection.
7. The unit is factory-charged with refrigerant; some systems may require additional charging based on pipe size and length.
8. Use only tools designed exclusively for the refrigerant type in the system to ensure pressure resistance and prevent foreign materials from entering the system.

1.4 Electrical

DANGER: RICK OF ELECTROCUTION
1. Before removing the switch box cover, connecting electrical wiring, or touching electrical components, turn off all power supplies.
2. Before servicing, disconnect the power supply for more than 10 minutes and measure the voltage at the terminals of main circuit capacitors or electrical components. You may only touch electrical components if the voltage is less than 50 V DC. Refer to the wiring diagram for the terminal locations.
3. Do not touch electrical components with wet hands.
4. Do not leave the unit unattended when the service cover is removed.
WARNING
1. If not factory-installed, a main switch or other disconnection device must be installed in the fixed wiring. This device must provide contact separation in all poles to ensure full disconnection under overvoltage category III conditions.
2. Ensure on-site wiring complies with applicable regulations.
3. All on-site wiring must be carried out in accordance with the wiring diagram supplied with the product.
4. Never squeeze bundled cables, and ensure they do not come into contact with piping or sharp edges. Also, ensure no external pressure is applied to terminal connections.
5. Be sure to install earthing wiring. Do not earth the unit to a utility pipe, surge absorber, or telephone earth. Inadequate earthing may cause electric shock.
6. Use a dedicated power circuit. Never use a power supply shared with another appliance.
7. Install the required fuses or circuit breakers.
8. Install an earth leakage protector. Failure to do so may result in electric shock or fire.
9. When installing the earth leakage protector, ensure it is compatible with the inverter (resistant to high-frequency electrical noise) to prevent unnecessary tripping.
10. After completing electrical work, verify that all electrical components and terminals inside the electrical component box are securely connected.
11. Ensure all covers are closed before starting the unit.
CAUTION
1. When connecting the power supply: First connect the earth cable, then make the current-carrying connections.
2. When disconnecting the power supply: First disconnect the current-carrying cables, then separate the earth connection.
3. The length of the conductors between the power supply stress relief and the terminal block must be such that if the power supply is pulled loose from the stress relief, the current-carrying wires will be tautened before the earth wire.
NOTICE
1. Precautions when laying power wiring: 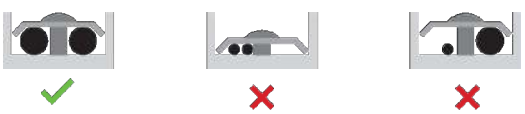

2. Do not connect wires of different thicknesses to the power terminal block (looseness in the power wiring may cause abnormal heating).
3. When connecting wires of the same thickness, follow the method shown in the figure above.
4. For wiring, use the designated power wire, connect it firmly, and then secure it to prevent external pressure from being exerted on the terminal board.
5. Use an appropriate screwdriver to tighten the terminal screws. A screwdriver with an overly small head will damage the screw head, making proper tightening impossible.
6. Over-tightening the terminal screws may cause them to break.
7. Install power cables at least 1 meter away from televisions or radios to prevent interference. Depending on the radio waves, a 1-meter distance may not be sufficient.

a. For power supply: 230V 50Hz

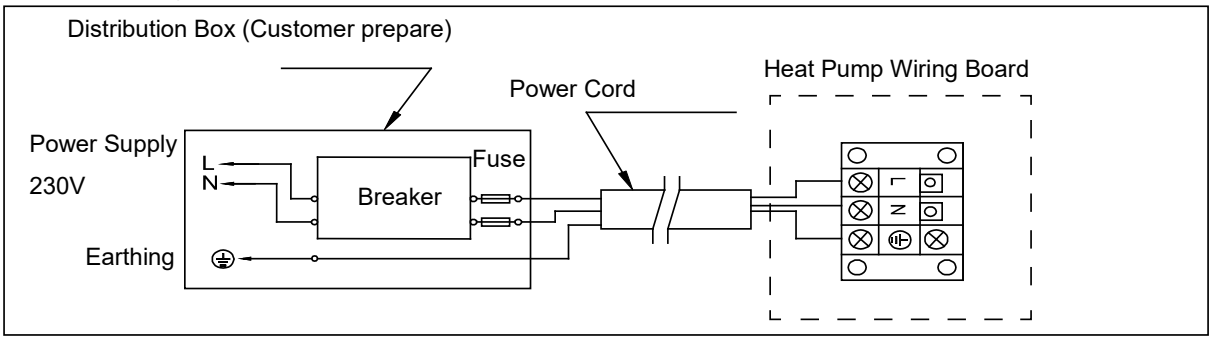

b. For power supply: 400V 50Hz

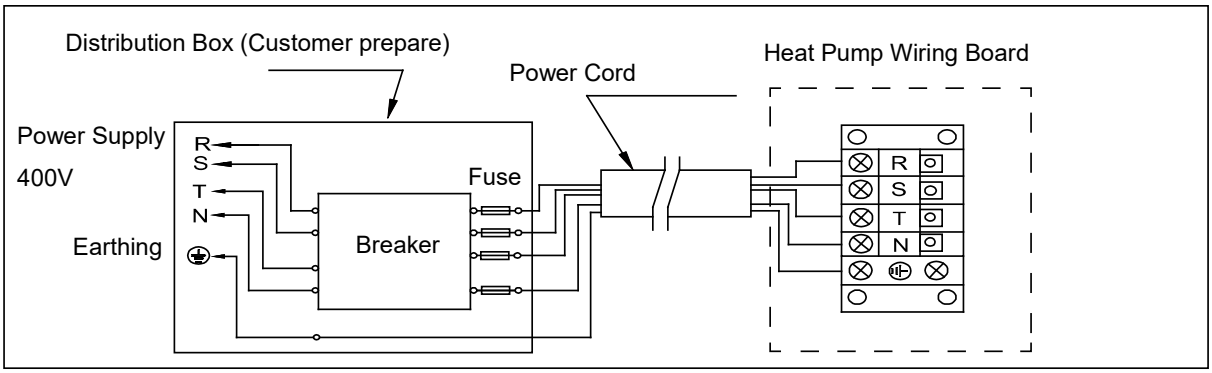

Note:

1. The disconnection incorporated in the fixed wiring shall be in accordance with AS/NZS 3000 Electrical installations shall be provided with devices to prevent or remove hazards associated with the electrical installation and for maintenance of electrically activated equipment. Electrical installations shall include all switching devices or other means of disconnection necessary to enable operations, repairs and maintenance work to be carried out with safety.

2. Supply cords of parts of appliances for outdoor use shall not be lighter than polychloroprene sheathed flexible cord (code designation 60245 IEC 57).

2 Product Description

2.1 Intended use

Improper use or use for unintended purposes may result in injury or death to users or others, as well as damage to the product and other property.

- This product is an outdoor unit of an air-to-water heat pump with a monoblock design.
- It uses outdoor air as a heat source and is suitable for heating residential buildings and generating domestic hot water.
- The air discharged from the product must be allowed to flow freely and must not be used for any other purposes.
- The product is intended exclusively for outdoor installation.
- It is designed solely for domestic use.

Intended use includes:

- Adhering to the operating instructions provided for the product and all associated installation components.
- Complying with all inspection and maintenance requirements outlined in the instructions.

This product may be used by children aged 8 years and older, as well as individuals with reduced physical, sensory, or mental capabilities, or those lacking experience and knowledge, provided they have received supervision or instruction on safe use, understand the associated hazards, and can use the product safely.

Children must not play with the product.

Cleaning and user maintenance must not be performed by children unless under supervision.

Any use not specified in these instructions, or use beyond the scope defined herein, is considered improper. This includes direct commercial or industrial use, which is also deemed improper.

Caution

Any form of improper use is prohibited.

2.2 Heat pump system

Design of a typical monoblock heat pump system:

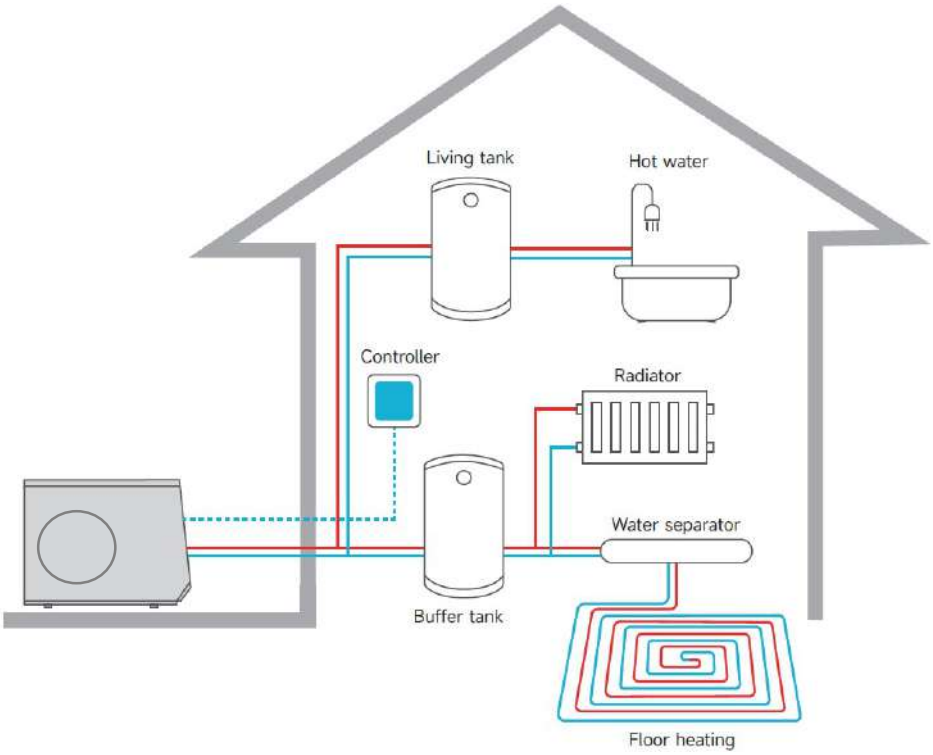

2.3 Description of the product

This product is the outdoor unit of an air-to-water heat pump featuring monoblock technology. With a heat pump, you can achieve three kinds of basic benefits: heating, cooling, and domestic hot water.

2.4 Working principle of the heat pump

The heat pump features a closed refrigerant circuit where refrigerant circulates. Through the cyclic processes of evaporation, compression, liquefaction, and expansion, it absorbs thermal energy from the surrounding environment and transfers it to the building. In cooling mode, thermal energy is extracted from the building and discharged into the environment.

2.5 Product design

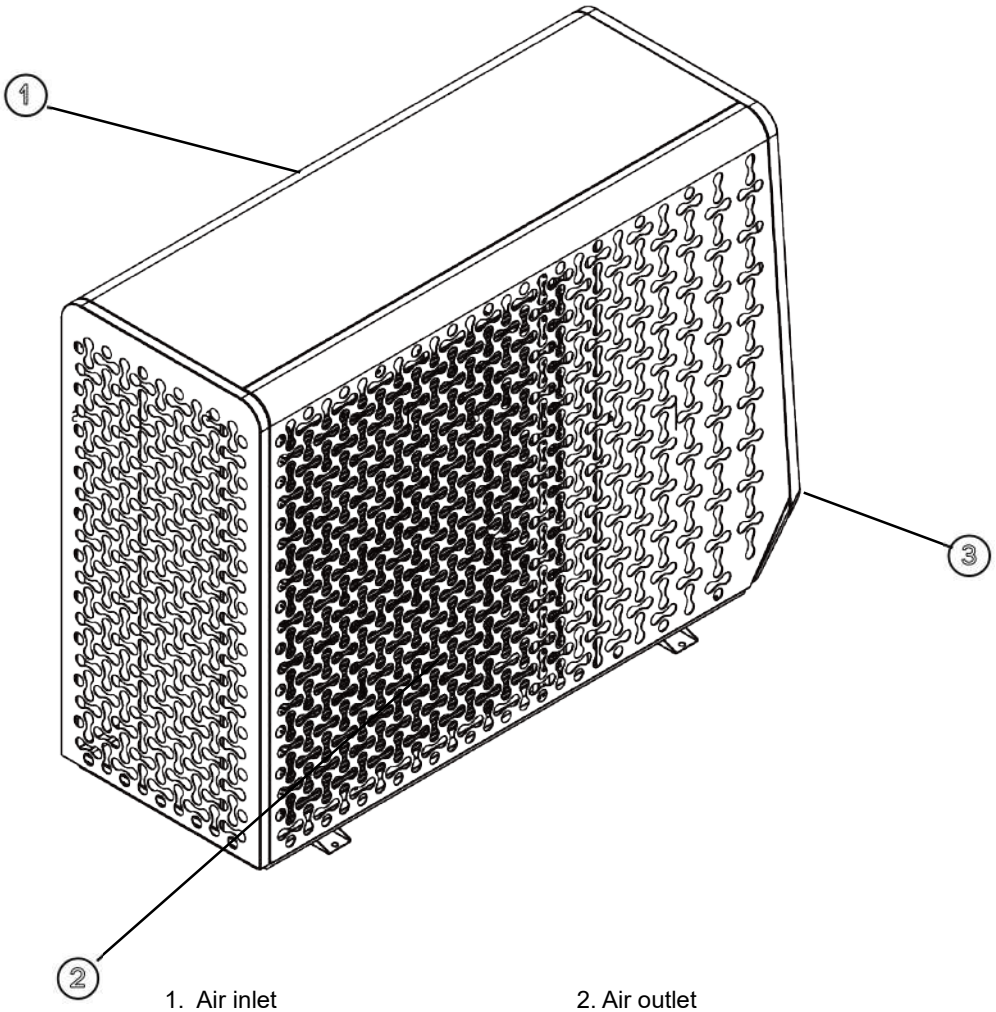

1. Air inlet
2. Air outlet
3. Maintenance Panel

2.6 Nameplate and serial number

The unit's nameplate is located at the upper left corner of the water in/out panel.

The nameplate includes the model name and the serial number.

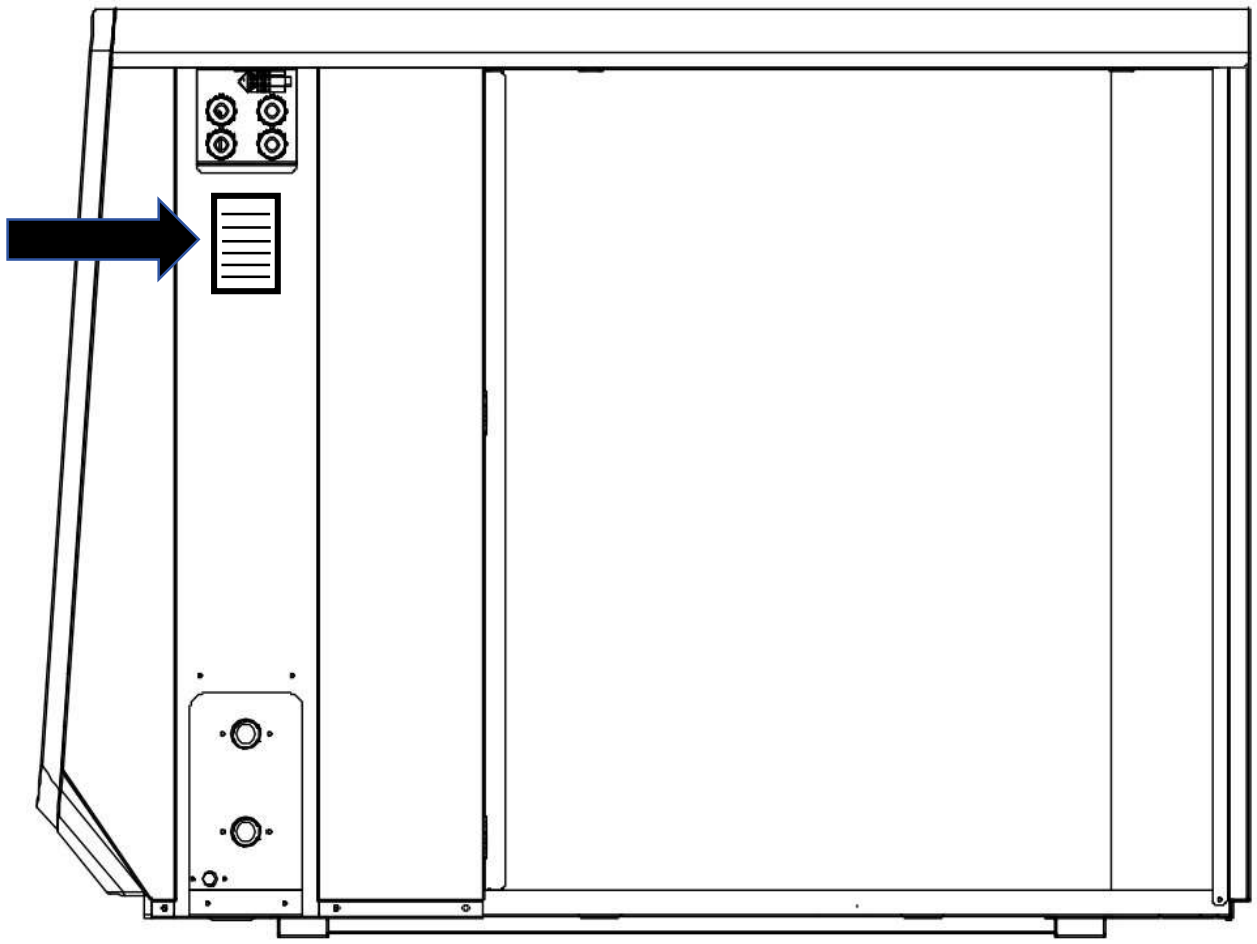

3 Protective Zone and Drainage

3.1 Protective zone

This product contains R290 refrigerant. It should be noted that this refrigerant has a higher density than air; in the event of a leak, the escaping refrigerant may accumulate near the ground.

There must be no ignition sources in the protective zone, such as plug sockets, light switches, lamps, electrical switches, or other permanent ignition sources.

A protective zone is defined around the product. There must be no windows, doors, light shafts, cellar entrances, escape hatches, flat-roof windows or ventilation openings in the protective zone.

There must be no ignition sources, such as plug sockets, light switches, lamps, electrical switches or other permanent ignitions sources, in the protective zone.

The protective zone must not extend to adjacent buildings or public traffic areas.

No subsequent structural modifications that violate the aforementioned rules for the protective zone are permitted within the protective zone.

3.1.1 Protective zone for ground installation

① Ground installation

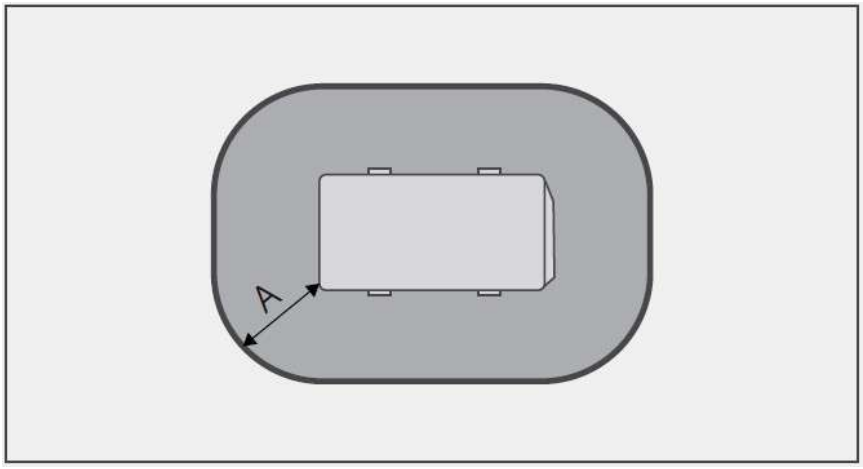

A 1000mm

② Ground installation in a raised position

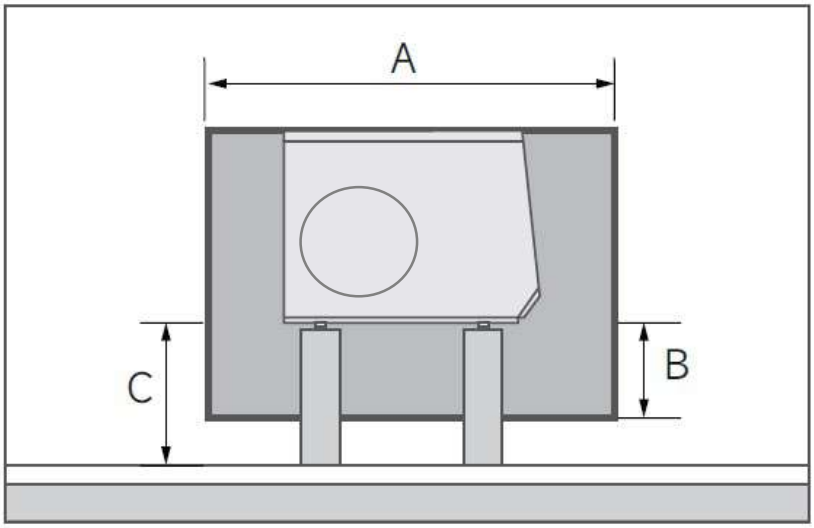

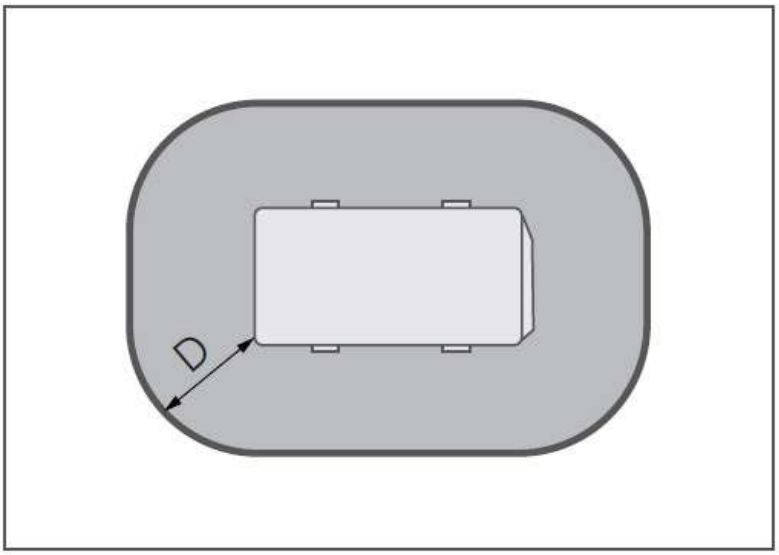

A	2100mm	C	＞1000mm
B	1000mm	D	500mm

③ Ground installation in front of a building wall

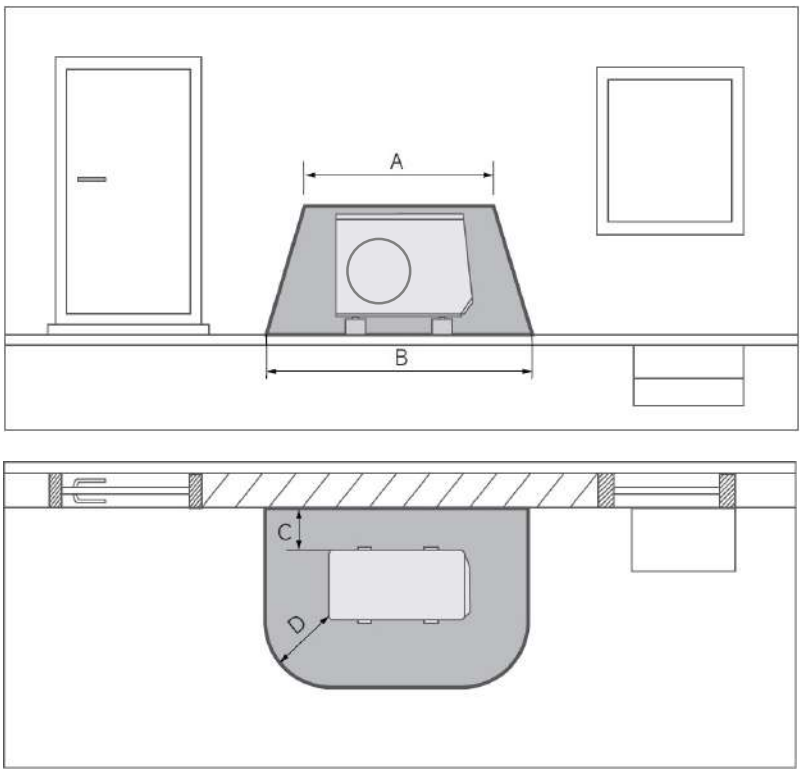

A	2100mm	C	200mm/250mm
B	3100mm	D	1000mm

④ Ground installation in a building corner

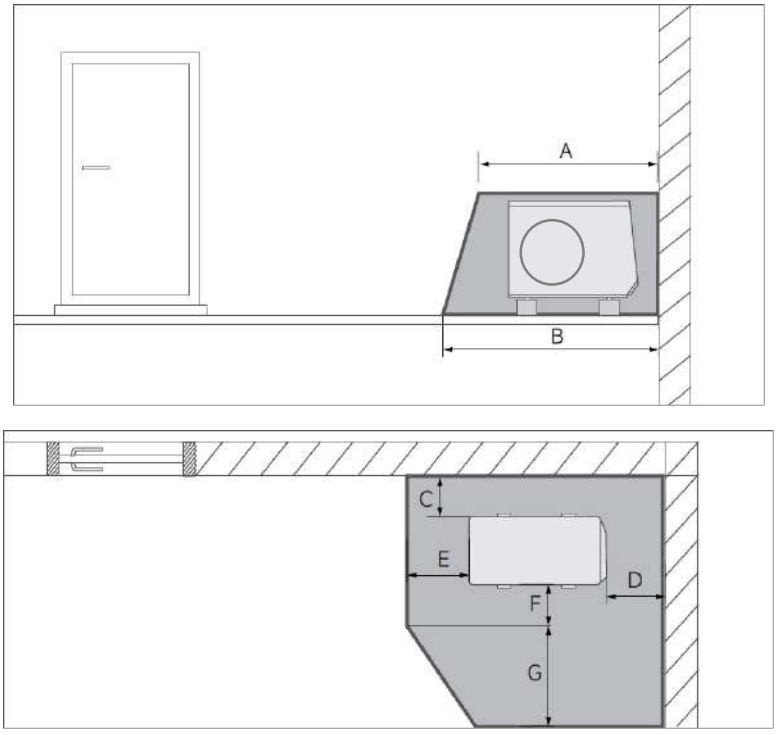

A	2100mm	E	1000mm
B	2600mm	F	500mm
C	200mm/250mm	G	1800mm
D	500mm		

3.1.2 Protective zone for wall installation

① Wall installation in a low position

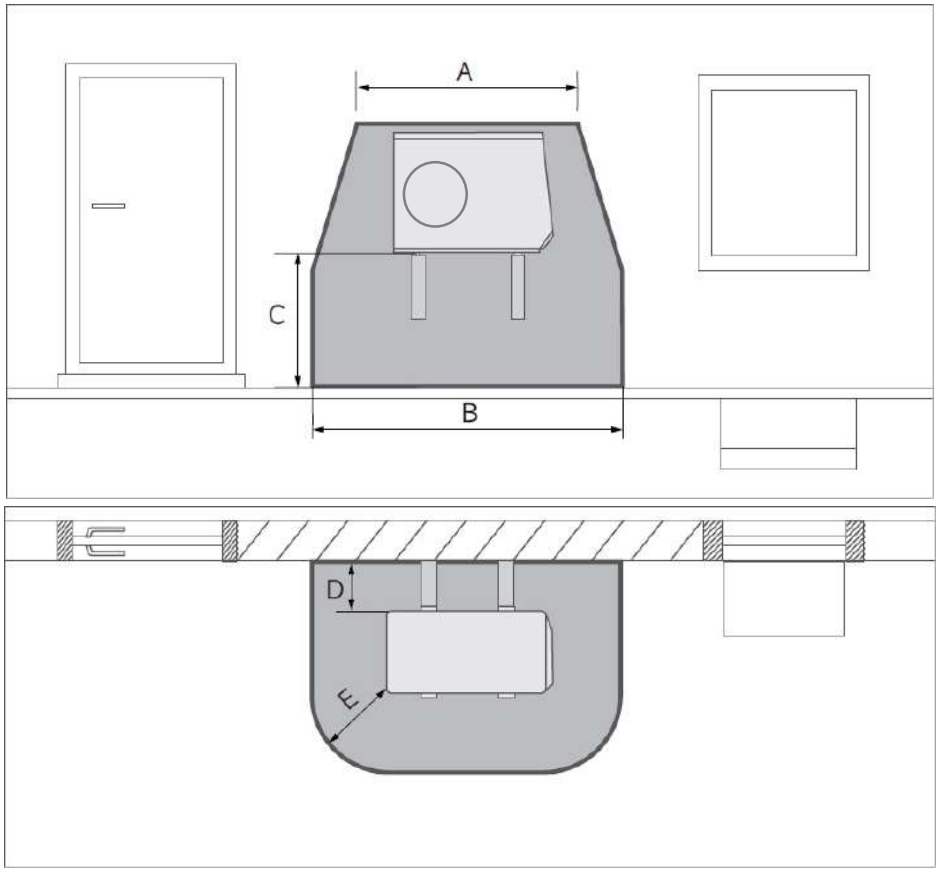

A	2100mm	D	200mm/250mm
B	3100mm	E	1000mm
C	＜1000mm		

② Wall installation in a raised position

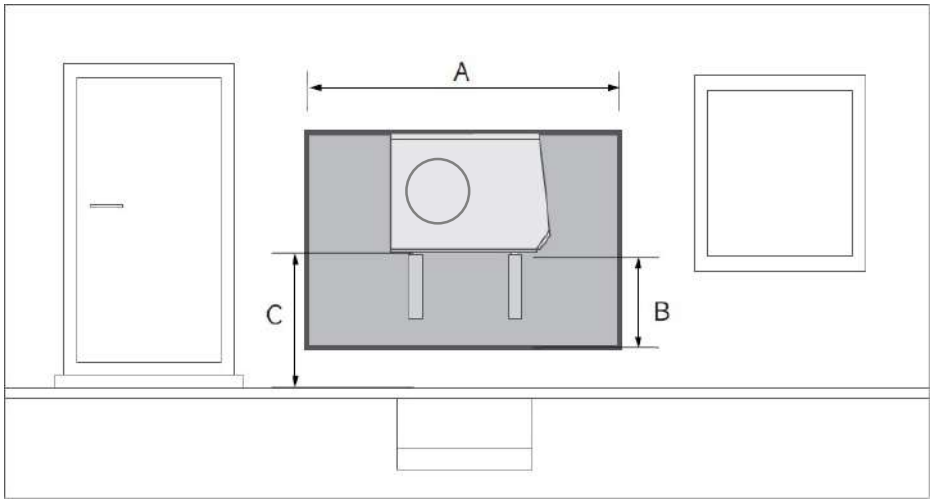

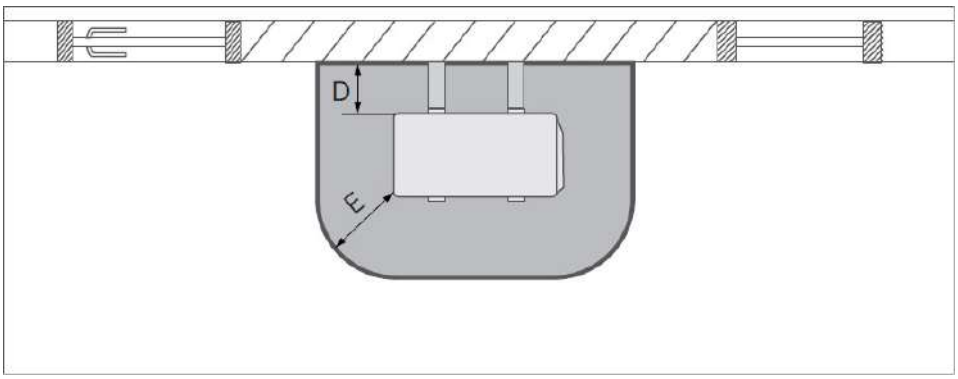

A	2100mm	D	200mm/250mm
B	1000mm	E	500mm
C	＞1000mm		

③ **Wall installation in a left-hand building corner in a raised position**

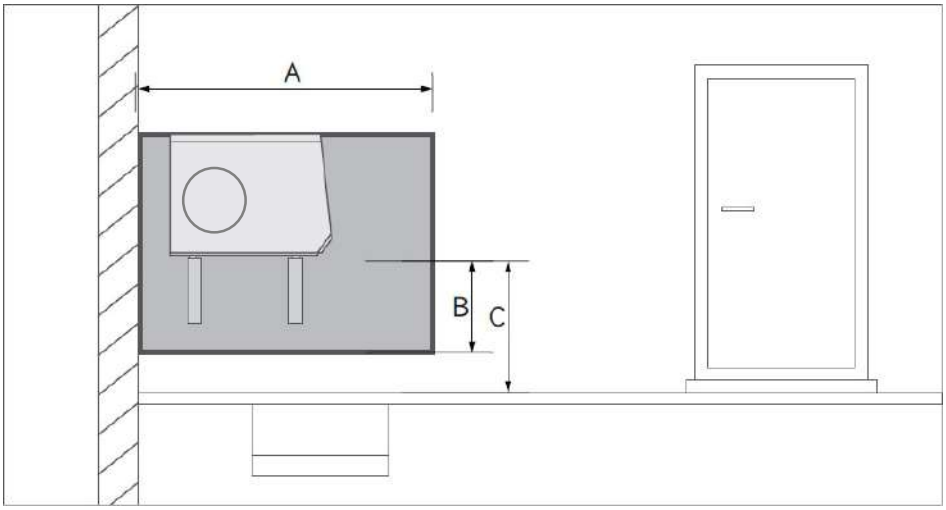

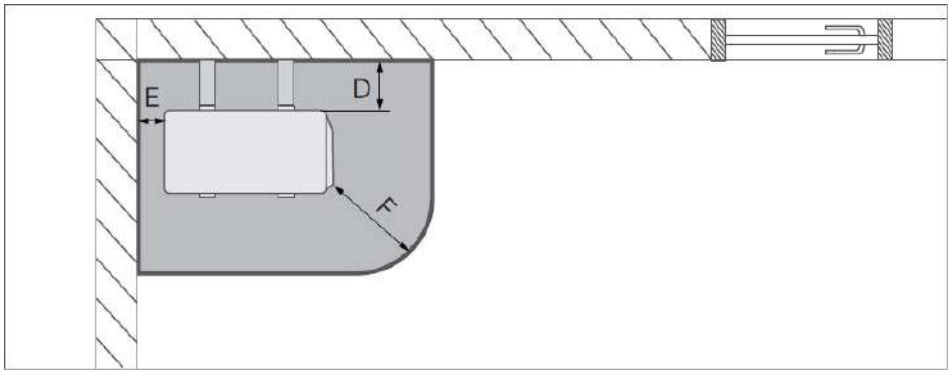

A	1700mm	D	200mm/250mm
B	1000mm	E	100mm
C	＞1000mm	F	500mm

④ **Wall installation in a right-hand building corner in a raised position**

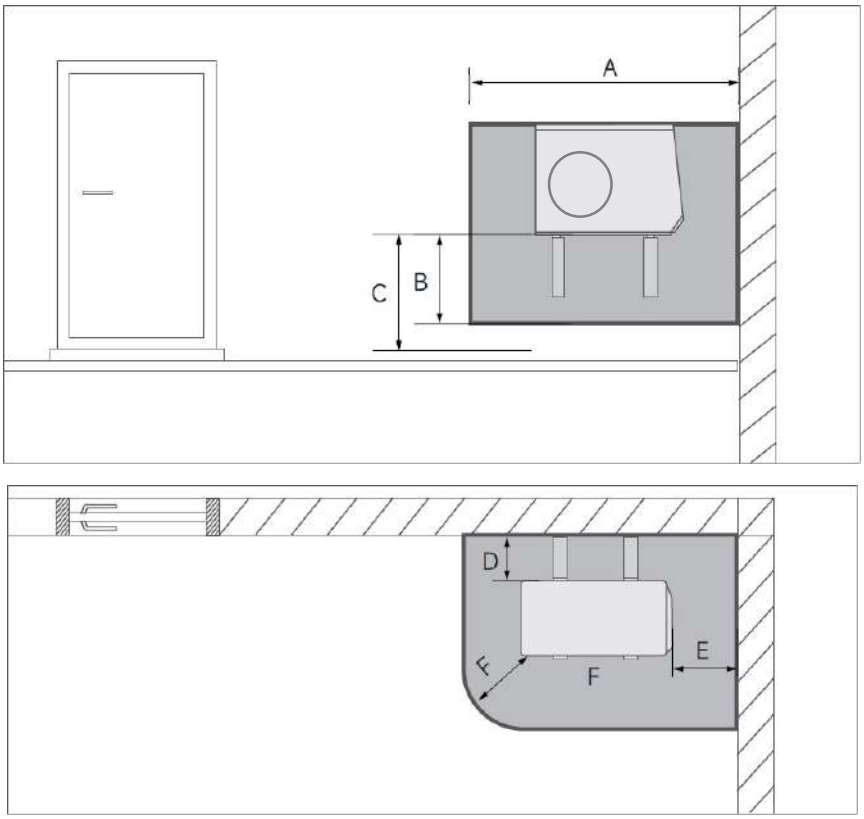

A	2100mm	D	200mm/250mm
B	1000mm	E	500mm
C	＞1000mm	F	500mm

3.1.3 Protective zone for flat-roof installation

① **Flat-roof installation**

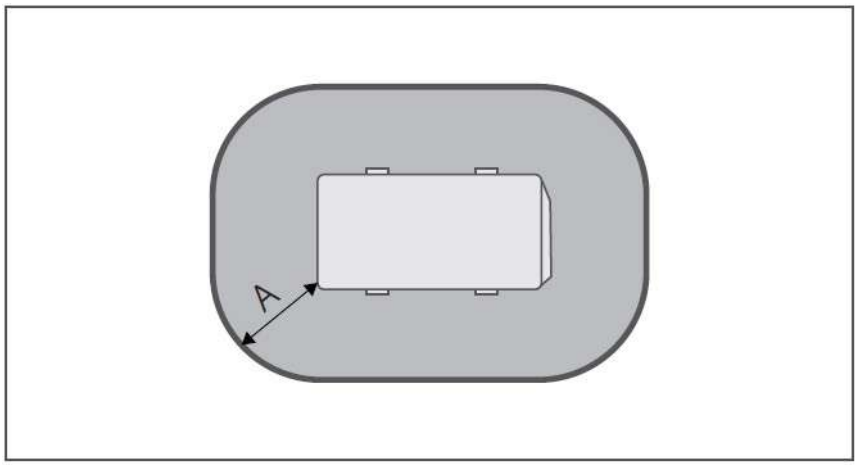

A 1000mm

② **Flat-roof installation in a raised position**

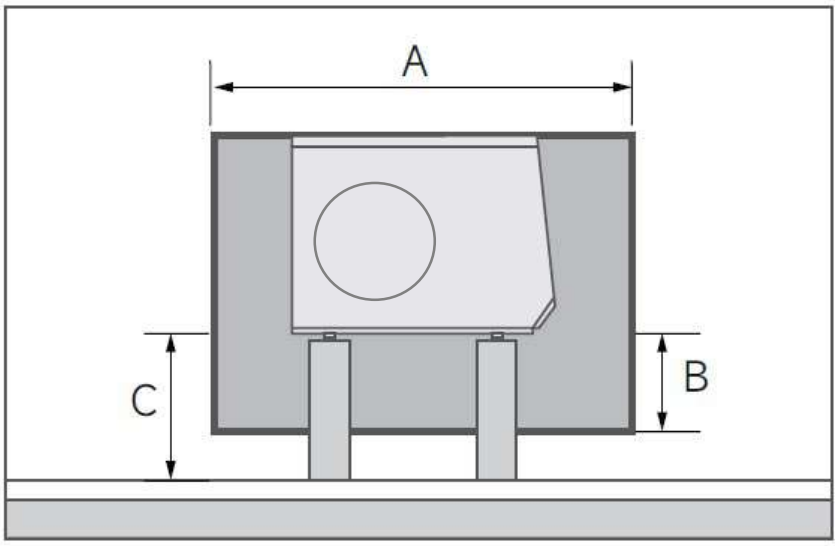

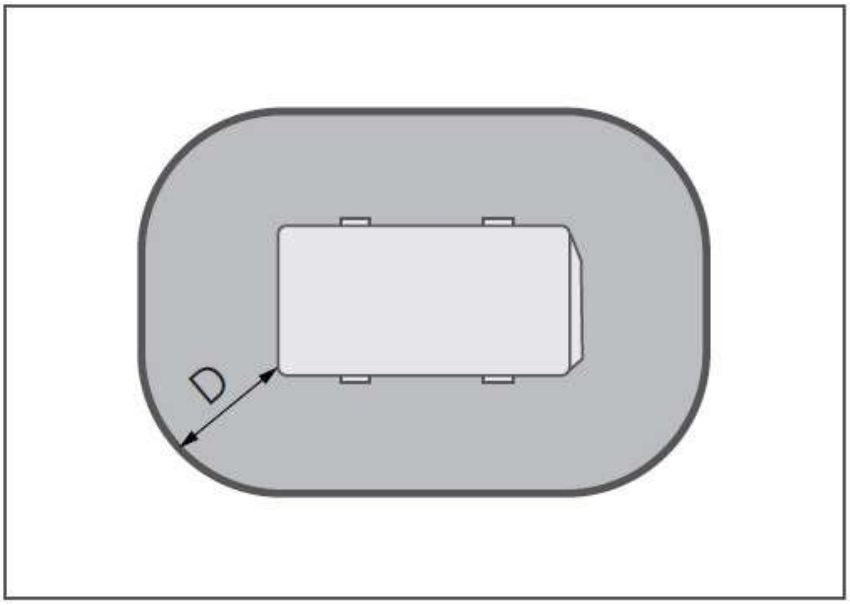

A	2100mm	C	＞1000mm
B	1000mm	D	500mm

3.2 Drainage

Accumulated condensate can be directed to a sewer, pump sump, or soakaway via a downpipe, gully, balcony drainage, or roof drainage. Open gullies or downpipes within the protective zone do not present any safety risks.

For all types of installations, it is essential to ensure that accumulated condensate is discharged in a frost-free manner.

3.2.1 Design of the condensate discharge for ground installation

For ground installations, condensate must be discharged through a downpipe into a gravel bed situated in the frost-free zone.

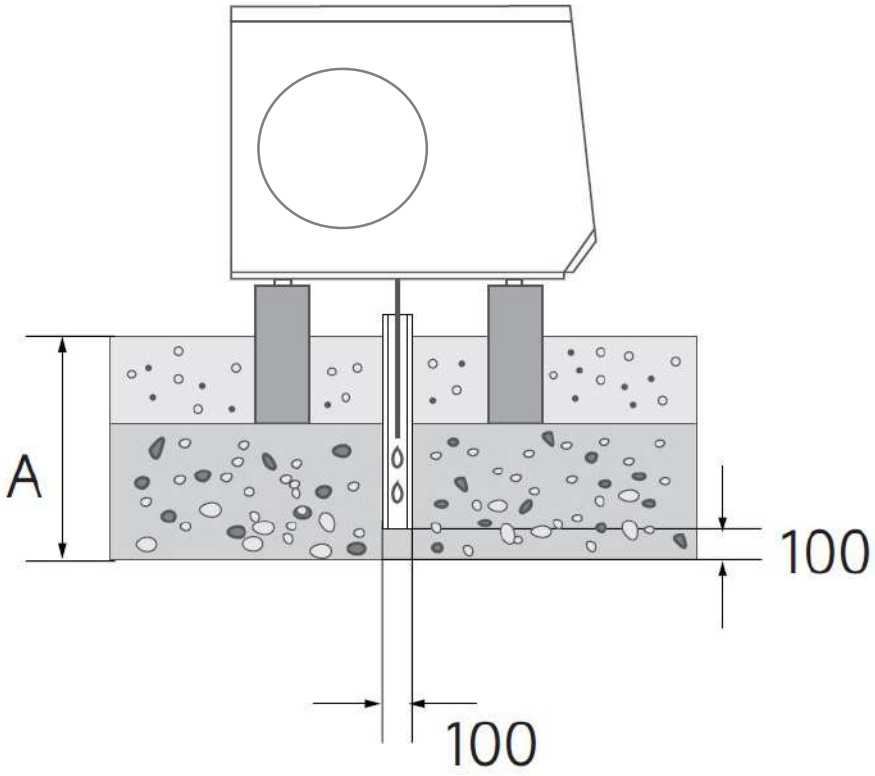

For areas with ground frost, dimension A must be ≥ 900 mm; for areas without ground frost, it must be ≥ 600 mm.

The downpipe must empty into a sufficiently large gravel bed to allow condensate to drain freely.

To prevent condensate from freezing, the heating wire must be fed into the downpipe through the condensate discharge tundish.

3.2.2 Design of the condensate discharge for ground installation

For wall installations, condensate can be drained into a gravel bed situated beneath the product.

Alternatively, condensate can be drained by connecting the condensate discharge pipe to a downpipe. In such cases, depending on local conditions, electrical trace heating must be used to keep the condensate discharge pipe frost-free.

3.2.3 Design of the condensate discharge for flat roof installation

For flat roof installations, condensate can be drained by connecting a condensate discharge pipe to a downpipe or roof drainage. In such cases, depending on local conditions, electrical trace heating must be used to keep the condensate discharge pipe frost-free.

4 About The Unit

4.1 Features

4.1.1 Intelligent control

You can not only control the operation of the device via the wired controller, but also remotely control and monitor the device via a mobile APP based on wireless Wi-Fi module technology.

4.1.2 Excellent performance

heat pump boasts excellent performance, achieving a double A+++ energy efficiency rating. Moreover, under the condition of 7℃ ambient temperature and 35℃ water outlet temperature (A7W35), its Coefficient of Performance (COP) can reach 7 – a level unmatched by other products.

4.1.3 Quiet Running

High-quality compressor, with insulation, is used together with high-quality fan motor and water pump to ensure an ultimate low noise level.

4.1.4 High heat exchange rate

The heat pump unit uses a specially designed heat exchanger to enhance overall efficiency.

4.1.5 Large Working Range

This series of heat pump is designed to work under different working conditions as low as -25 degrees for heating.

4.1.6 Intelligent temperature control

The target temperature can be automatically adjusted to the most comfortable value for the user as the outdoor temperature changes, pursuing the ultimate heating experience.

4.1.7 EMS and SG ready

The heat pump supports EMS and SG ready functions.

4.1.8 Real-time energy consumption monitoring

Through the APP or remote controller, you can check the real-time power consumption and cumulative power consumption of the device at any time, giving you complete control over your device's energy consumption.

4.2 Dimension (mm)

Model: iGXC08

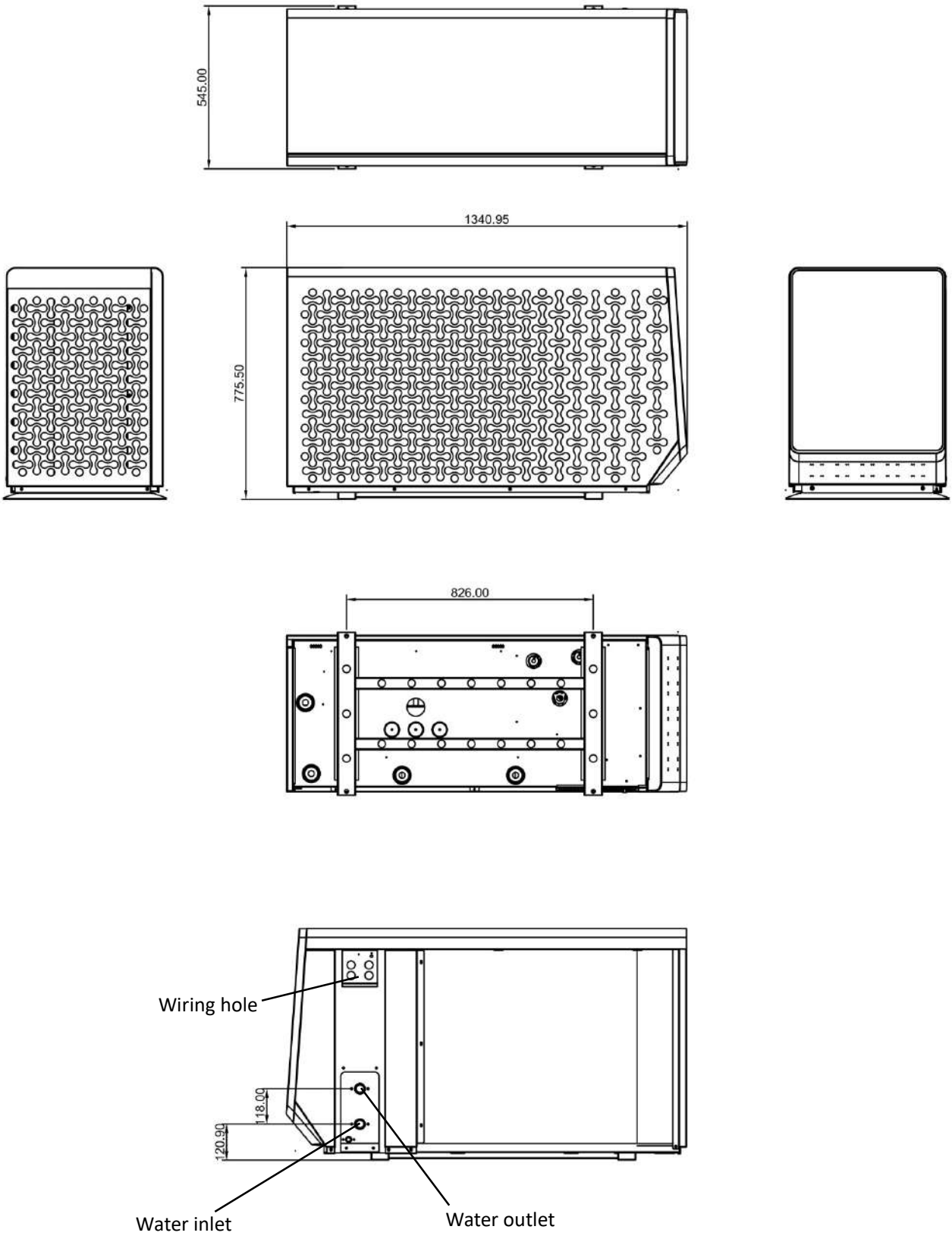

Model: iGXC11/ iGXC11T/ iGXC13/ iGXC13T

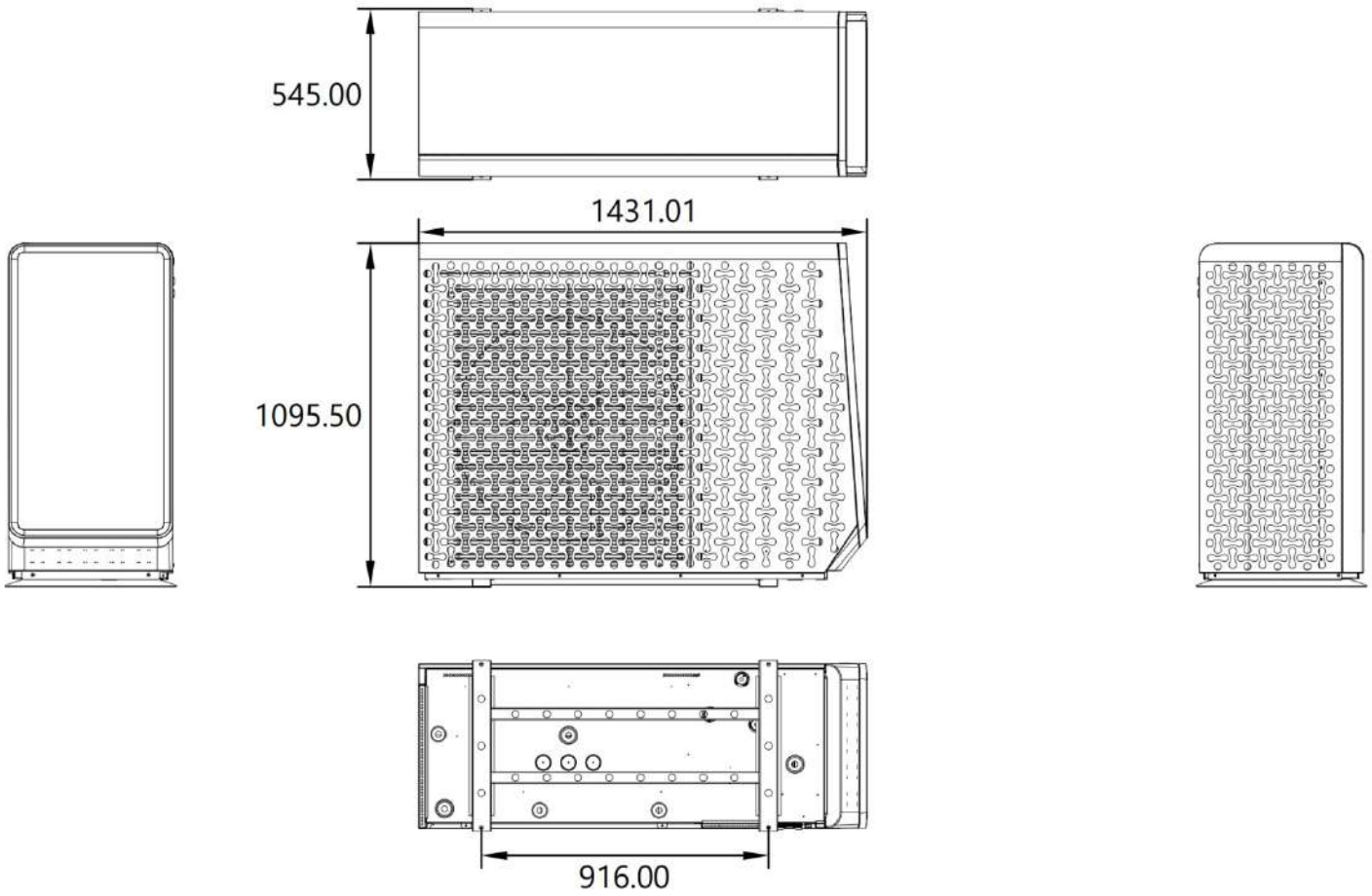

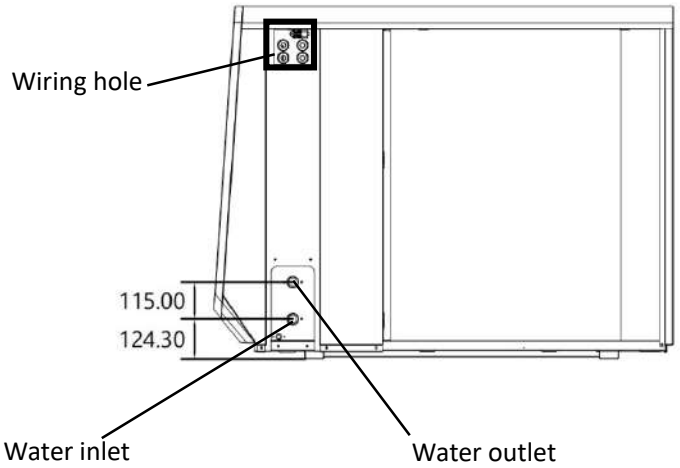

Model: iGXC16/iGXC16T

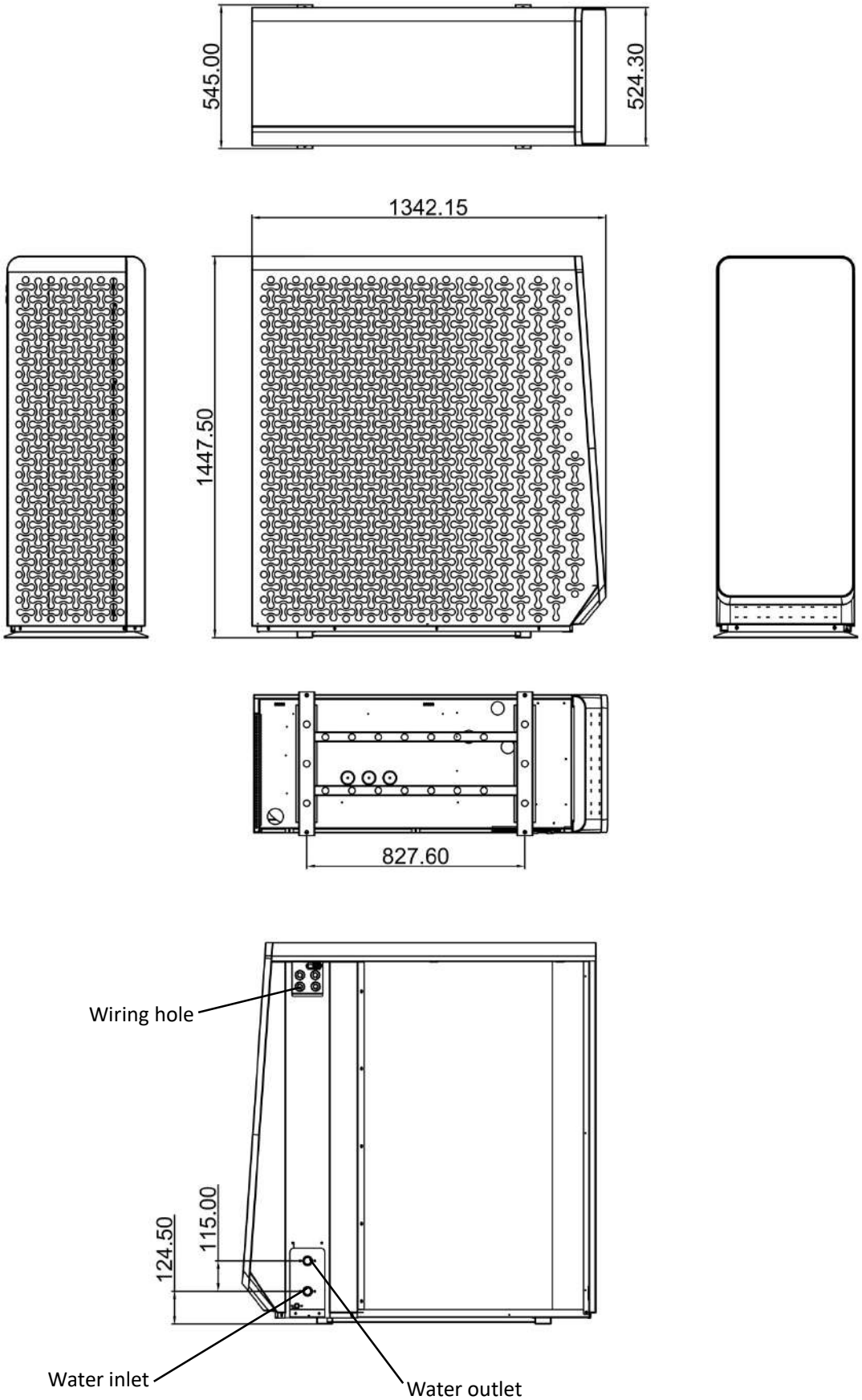

4.3 Accessory List

The accessory box contains:
a: Rubber feet x4
b: Drain connector x1
c: Display extension cable x1
d: Water tank sensor x2
e: Display x1
f: Screws x2
g: Wall-mounted panel x1
h: Anti-freeze Valve (option) x1
I: Refrigerant leakage detector(option) x1

Accessories of the unit			
Name	**Illustration**	**Quantity**	**Specification**
Rubber Feet	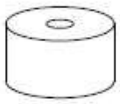	4	-
Drain Connector	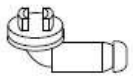	1	-
Display Extension Cable		1	10m
Hot Water Tank Sensor		2	10m
Display		1	-
Screws		2	-
Wall-mounted panel	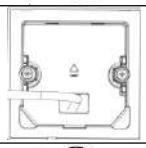	1	-
Anti-freeze Valve (option)		1	-
Refrigerant leakage detector(option)		1	-

5 Display Operation Guide

Menu Structure

1 Status Query	**1 Status Query**	**8 Force Open**
2 Display Setting	1.1 Input	8.1 Floor Heat Dry
3 Time and Date	1.2 Output	8.2 Force ON TBH
4 Timer	1.3 Version	8.3 Force ON DHW
5 WIFI Setting	**2 Display Setting**	**9 Holiday Mode Setting**
6 User Parameters	2.1 Language	9.1 Holiday Away
7 Manual Defrost	2.2 Brightness	9.2 Holiday Home
8 Force Open	2.3 Screen Lock Setting	**10 Advanced Setting**
9 Holiday Mode Set	2.4 No Operation Screen Lock Time	10.1 Admin. Setting
10 Advanced Setting	2.5 Screensaver	10.2 Maintain. Setting
11 Energy Consumption Metering	2.6 Key Sound	10.3 Project Setting
12 Error	2.7 Alarm Sound	10.4 User Setting
13 Zone Setting	2.8 Unit	10.5 Distributor
	2.9 Network Time Synchronization	**11 Energy Consumption Metering**
	2.10 Temp.CMPST.	11.1 The last 24 hours
	3 Time and Date	11.2 The last 30 days
	3.1 System Time Setting	11.3 The last 12 months
	4 Timer	11.4 The last 10 years
	4.1 Timer on/off	**12 Error**
	4.2 Disinfection Timer	12.1 Current Error
	4.3 Silent Timer	12.2 History Error
	4.4 DHW Pump Timer	
	5 WIFI Setting	
	5.1 Connect WIFI	
	6 User Parameters	
	6.1 User Parameters Setting	
	7 Manual Defrost	
	7.1 Manual Defrost Setting	

1 Status Query
Used to check unit status parameters such as temperature, switch status, etc.

2 Display Setting
Settings related to the controller, such as brightness, language, etc.

3 Time and Date
Used to adjust the system time

4 Timer
Used to activate timer functions, such as power on/off timers, silent operation timers

5 WIFI Setting
Used for the controller to connect to WiFi

6 User Parameters
View and modify user-defined settings

7 Manual Defrost
Used to activate manual defrosting

8 Force Open
Rapid heating switch, e.g., instantly activating electric heating for the water tank

9 Holi.Mode Set
Settings related to holiday mode

10 Advanced Setting
Used for advanced parameter configuration; generally not recommended for modification

11 ECM
Used for viewing energy consumption data

12 Error
Used to query unit fault information, including current and historical

5.1 Main Interface

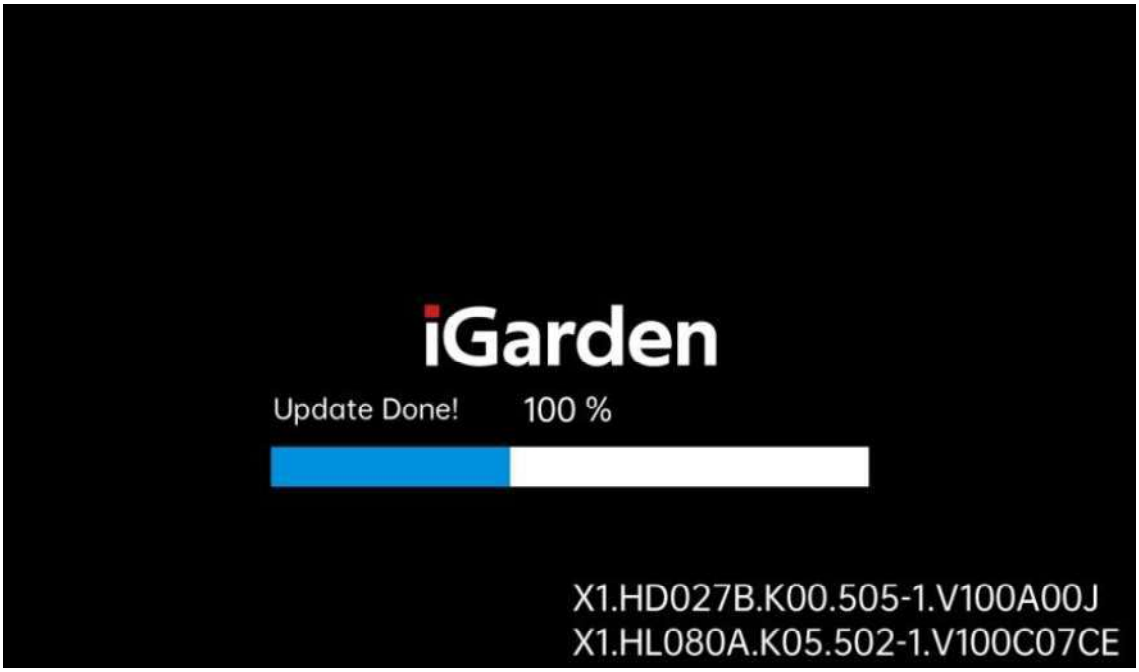



No.	Meaning	Description
①	Menu	After clicking this button, the unit will enter the function menu interface, where you can configure various custom modes.

②	Mode setting	After clicking this button, you can configure the unit mode settings. There are three modes available: Heating, Cooling, and Auto.
③	Power consumption	The number indicates real-time power consumption, while the bar chart shows hourly power consumption for the current day. If power consumption is not enabled, the main screen will not show.
④	Screen lock	After locking, the display cannot be operated; Press the button again to unlock the screen.
⑤	Operating strategy	After clicking this button, you can select the unit's operating strategy. There are three strategies available: Turbo, Standard, Silent and Auto.
⑥	100% Green enable button	After clicking this button, the unit will operate in conjunction with the solar inverter device. Note: This function requires the installation of iGarden's Inverter to be enabled.
⑦	DHW setting	Upper shows the target DHW temperature. You can slide the ring to set the target temperature or click the target temperature to set it. Lower shows the actual temperature of the hot water tank.
⑧	DHW switch	You can turn the DHW function on or off.
⑨	Fault icon	When a fault occurs, this icon will appear. Clicking it will take you to the fault log interface for viewing.
⑩	WiFi icon	It indicates the current network settings status. Clicking this icon to access the network settings interface.
⑪	SG Ready icon	When the SG Ready function is enabled, this icon will be illuminated, otherwise, it will be dim.
⑫	Defrosting icon	When the Defrosting is enabled, this icon will be illuminated, click can enable the forced defrost.
⑬	Anti-freeze icon	This icon appears when the unit enters anti-freeze mode.
⑭	System time	Shows the date and time. The network time will sync automatically after connecting to Wi-Fi
⑮	100% Green icon	When the 100% Green function is enabled, this icon will be illuminated. Click the icon to access the green power settings
⑯	Ambient temp.	It shows the current ambient temperature.
⑰	Electric heater	When the Electric heater is enabled, this icon will be illuminated, otherwise, it will be dim. Click the icon to access the forced opening settings
⑱	Operating strategy icon	It shows the current Operating strategy
⑲	On/off timer icon	When the Timer function is enabled, this icon will be illuminated. Click this icon to access the timer settings interface.
⑳	Heating/Cooling On/Off	You can turn the cooling/heating on or off.
㉑	Cooling/Heating Temperature Setting	It will show the current cooling/heating target temperature. Slide the ring to set the target temperature. You can also set the target temperature by tapping it; after tapping, the device will enter the target temperature setting interface. Current Temperature: shows the current temperature.

5.1.1 ON/OFF

Click the ON/OFF switch button corresponding to each zone on the main interface to enable/disable cooling, heating, or hot water for that zone.



5.1.2 Adjusting Temperature

Slide the ring to set the target temperature. You can also set the target temperature by tapping it; After tapping, the device will enter the target temperature setting interface

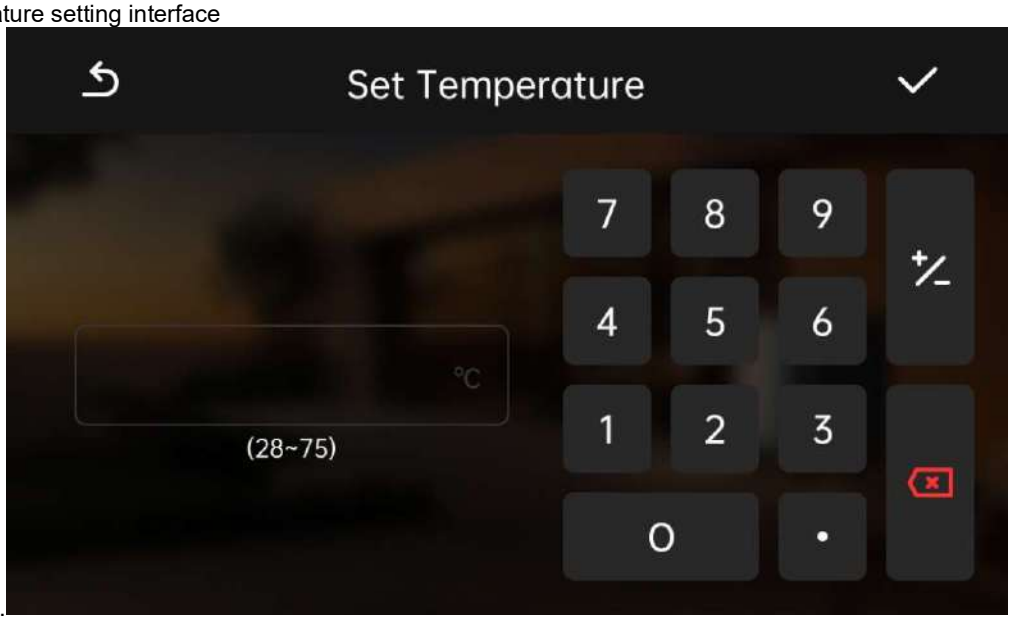

Enter the setting temperature directly, then click the checkmark to save the adjusted temperature value.

5.1.3 Air conditioning mode settings

There are three air conditioning modes: 1. Cooling mode, 2. Heating mode, 3. Auto mode.Click on the main interface to open the air conditioning mode settings, as shown:



Click the mode you want to set.

5.1.4 Screen unlock

If the lock screen icon appears, the display will not be operable, as shown in the picture:

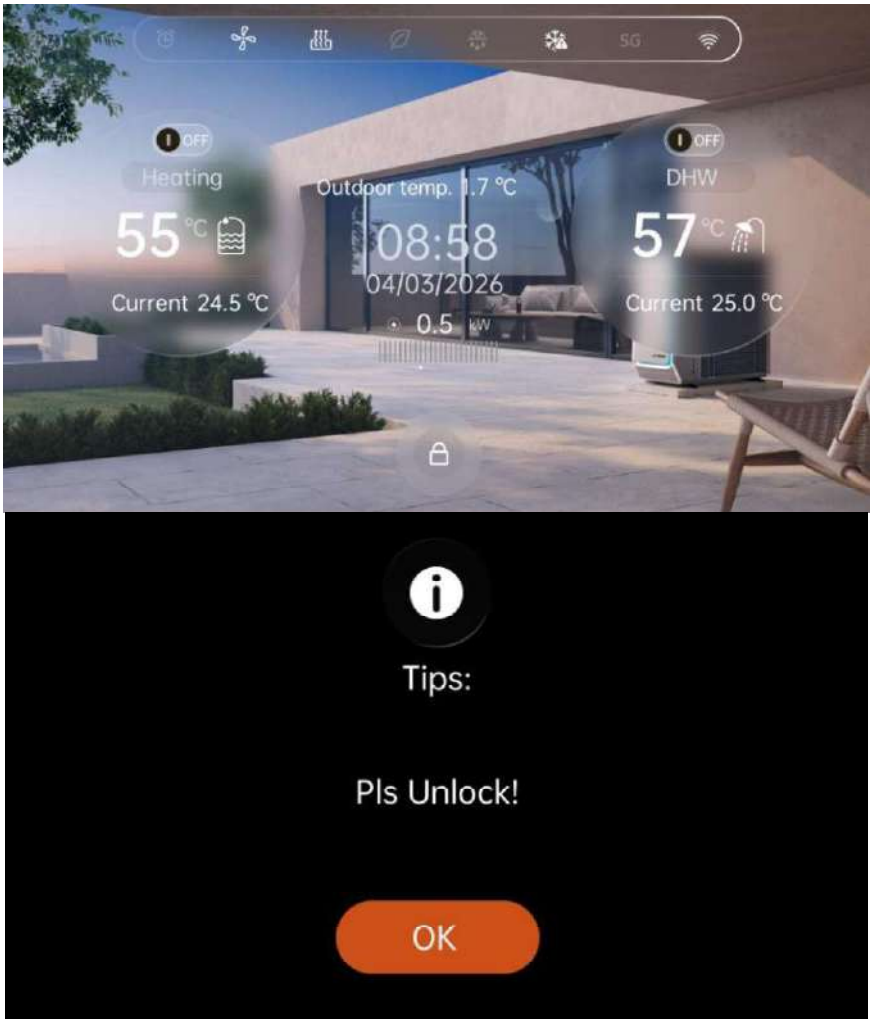

Long-press the lock screen icon again, and it will disappear, showing the main interface. The display can be operated again.

5.1.5 Power Mode Settings

There are four power modes: 1. Standard Mode, 2. Turbo Mode, 3. Silent Mode, 4. Auto Mode. Click the power mode settings will show on the main interface, as shown:



Click the mode you want to set.

5.2 Main menu

Click the Menu button to enter the main interface.







Query Menu

The Query Menu contains three interfaces:

① Analog Input Query Interface

② Load Output Query Interface

③ Program Version Query Interface

5.2.1 Analog Input Query Interface

This interface can be accessed to view the unit's current information (such as temperature, active electrical components, etc.).

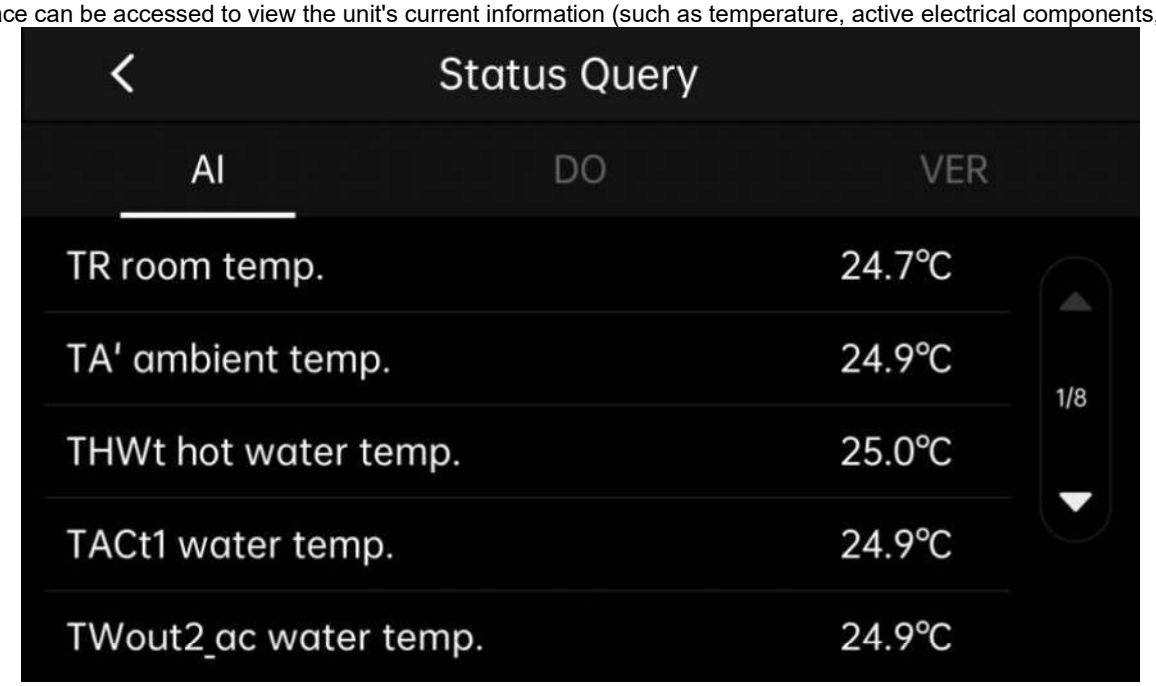

5.2.2 Load Output Query Interface

On the output interface, you can view the output status of each load component. When the corresponding button icon illuminates, it indicates that the component is active.

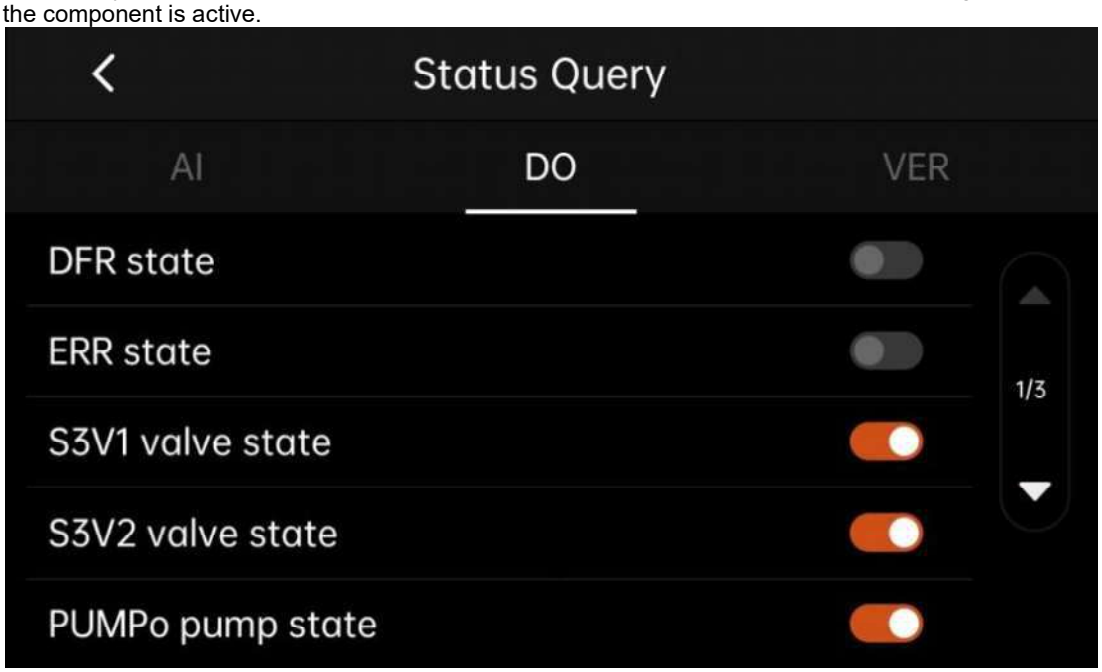

5.2.3 Program Version Query Interface

When handling certain after-sales issues, providing the software information used by the unit controller may be necessary to facilitate better troubleshooting. This information can be found by accessing the version query interface.

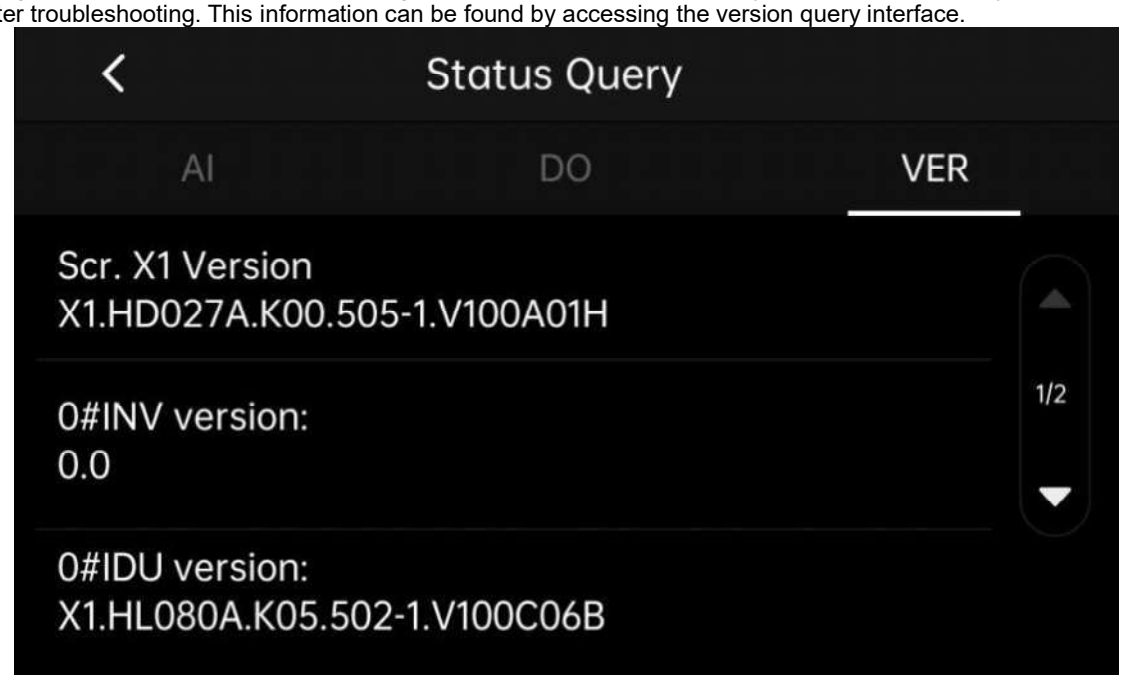

5.3 Display Setting

Display settings allow you to configure everyday preferences such as language, screen brightness, lock screen functionality, and keypad sounds.

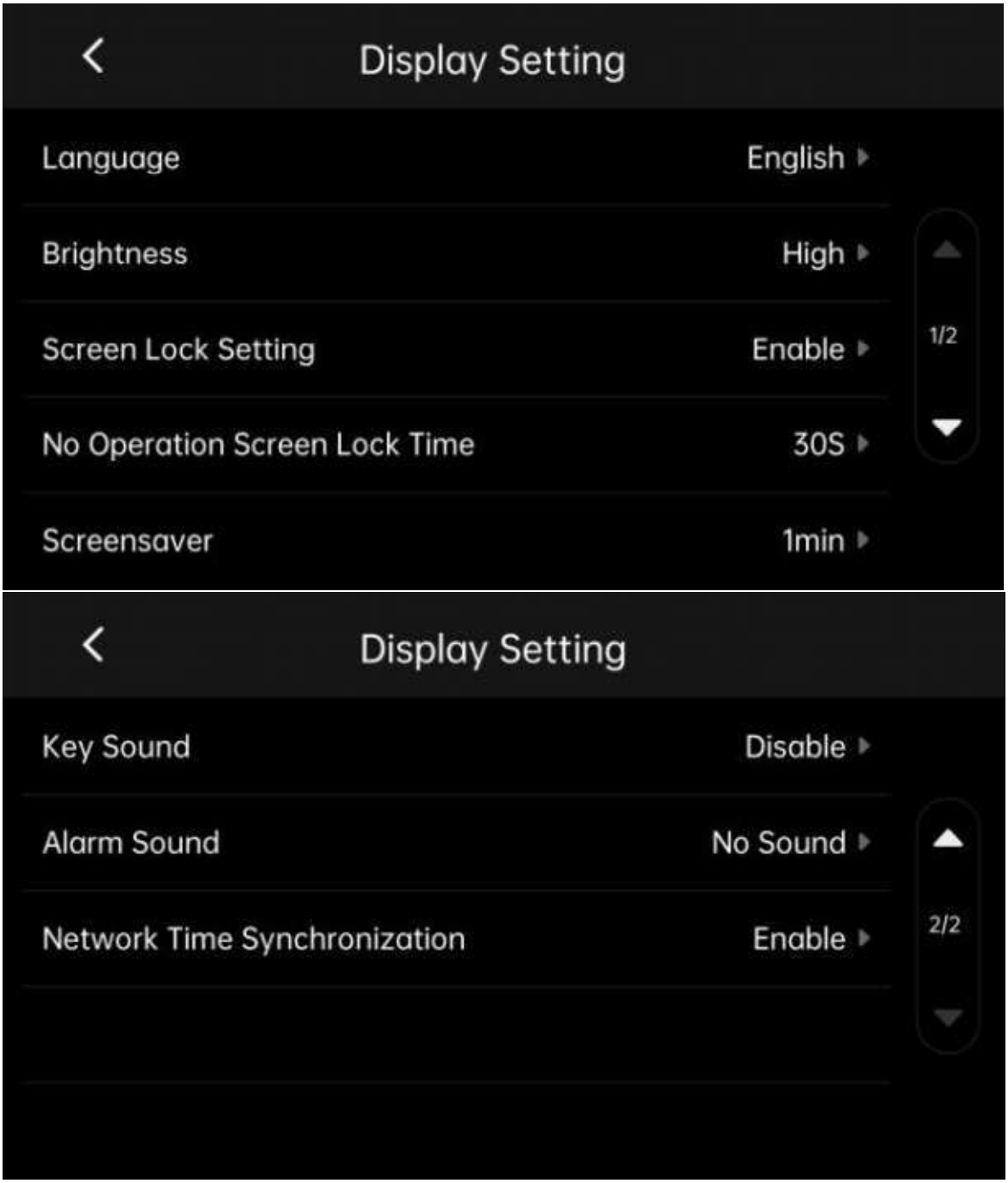

5.3.1 Language Setting

Users can select the language as they need.

5.3.2 Brightness setting

This display offers three brightness levels: high, medium, and low. Users can select the appropriate brightness based on their usage environment and personal preferences.

5.3.3 Screen saver

The display will enter screen saver mode after a period of inactivity. The duration before entering screen saver mode can be customized according to user preferences.
When the display is in screen saver mode, simply click the screen to resume normal operation.
Note: Setting the “Screen Saver Time” to 0 disables the screen saver function, keeping the screen constantly on.

5.3.4 Alarm Sound Setting

Users may configure whether an alarm sound is generated when faults occur, based on their specific needs. The following four modes are available:

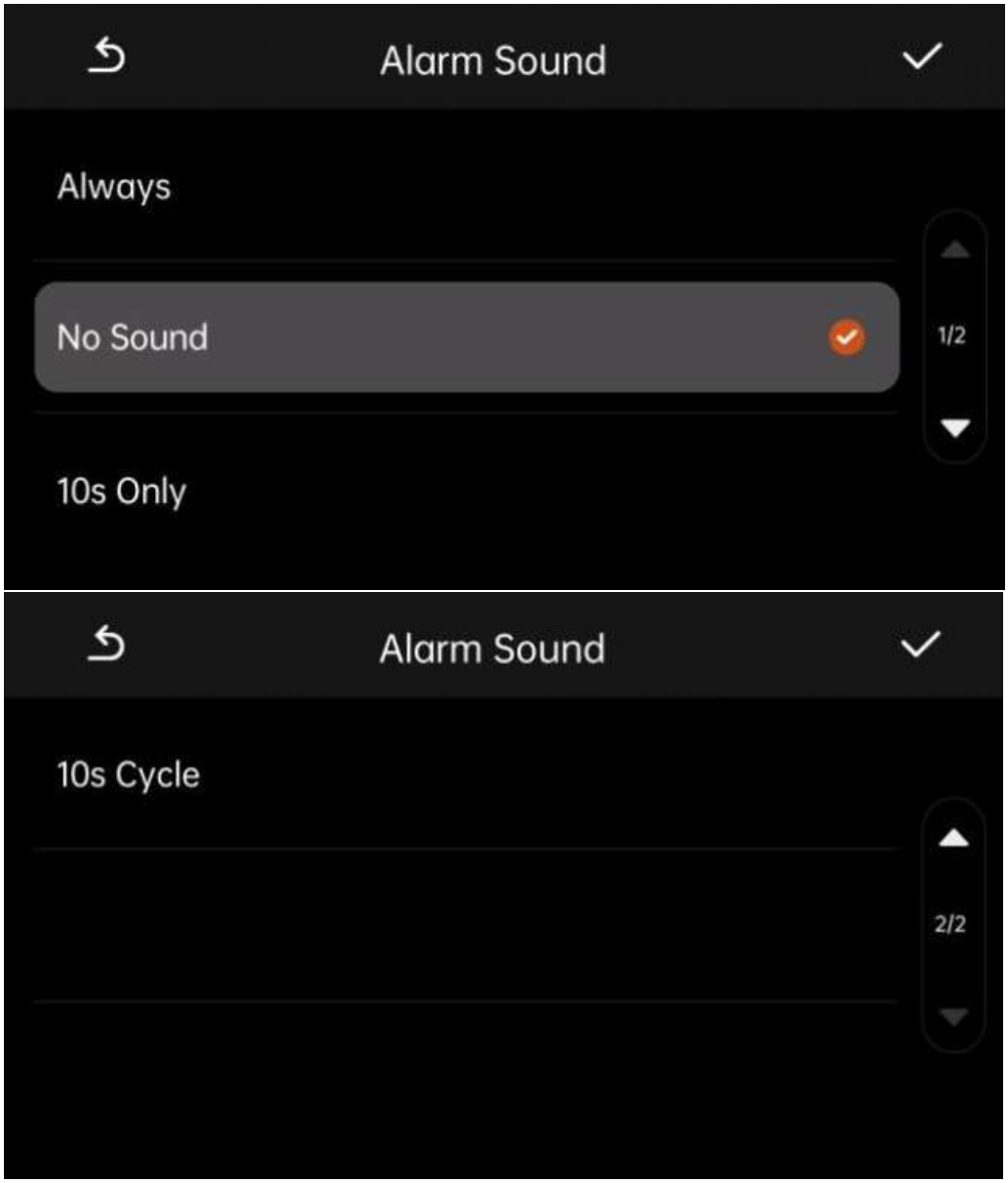

① Continuous Sound: The alarm will sound continuously until the fault query interface is accessed and the fault is cleared.
② No Sound: No corresponding alarm sound will be generated when a fault alarm occurs.
③ Ten-Second Sound: When a fault alarm occurs, the alarm sound will ring for ten seconds and then stop.
④ Ten-Second Cycle: When a fault alarm occurs, the alarm sound will sound for ten seconds and then stop. If the fault remains unresolved after thirty minutes, the alarm sound will sound again for ten seconds and then stop, repeating this cycle until all faults are resolved.

5.3.5 Keypad buzzer

In the display settings interface, you can enable or disable the “Keypad Buzzer” to control the audio feedback for this display's operations.
Enable Keypad Buzzer: Provides audible feedback during touch operations.
Disable Keypad Buzzer: No audible feedback during touch operations.

5.4 Time and Date

The date and time shown at the top of the main interface will synchronize with the network. If they do not match the actual date and time, you will need to manually adjust and calibrate them.
As shown in the image below:

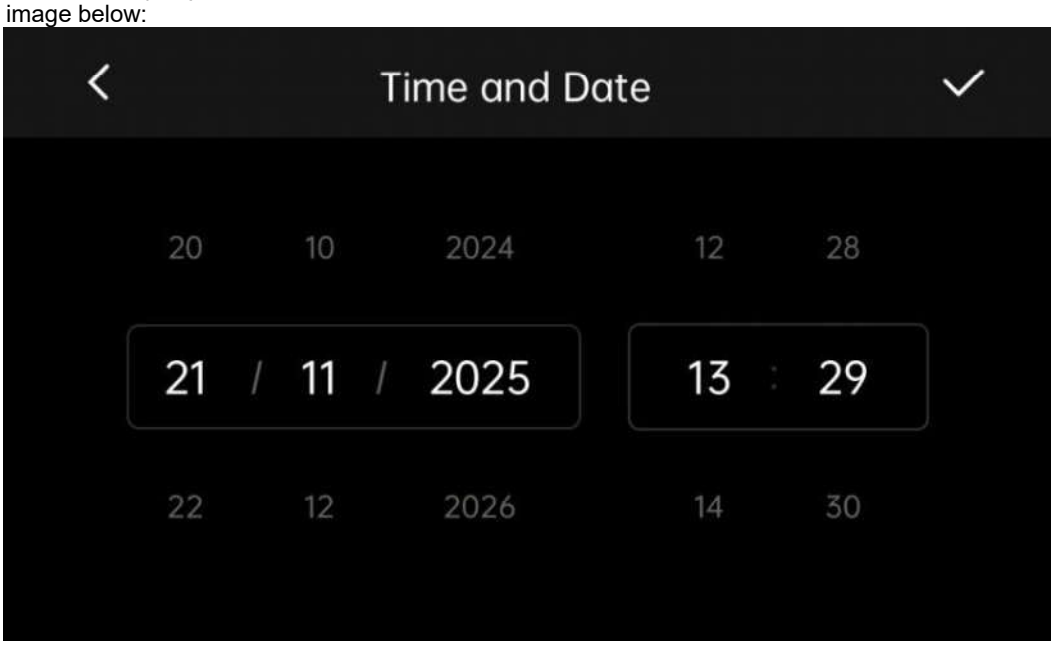

5.5 Timer setting

The Timer Settings interface offers four functions: Timer Power On/Off, Disinfection Timer, Silent Timer, and DHW Pump Timer, as shown below:



5.5.1 Timer on/off

Click to enter the Timer On/Off menu, where you'll find three options: Daily Timer, Weekly Timer, and Cancel Timer. You can also switch between Zone A, Zone B, and the hot water system to set different schedules for each zone.

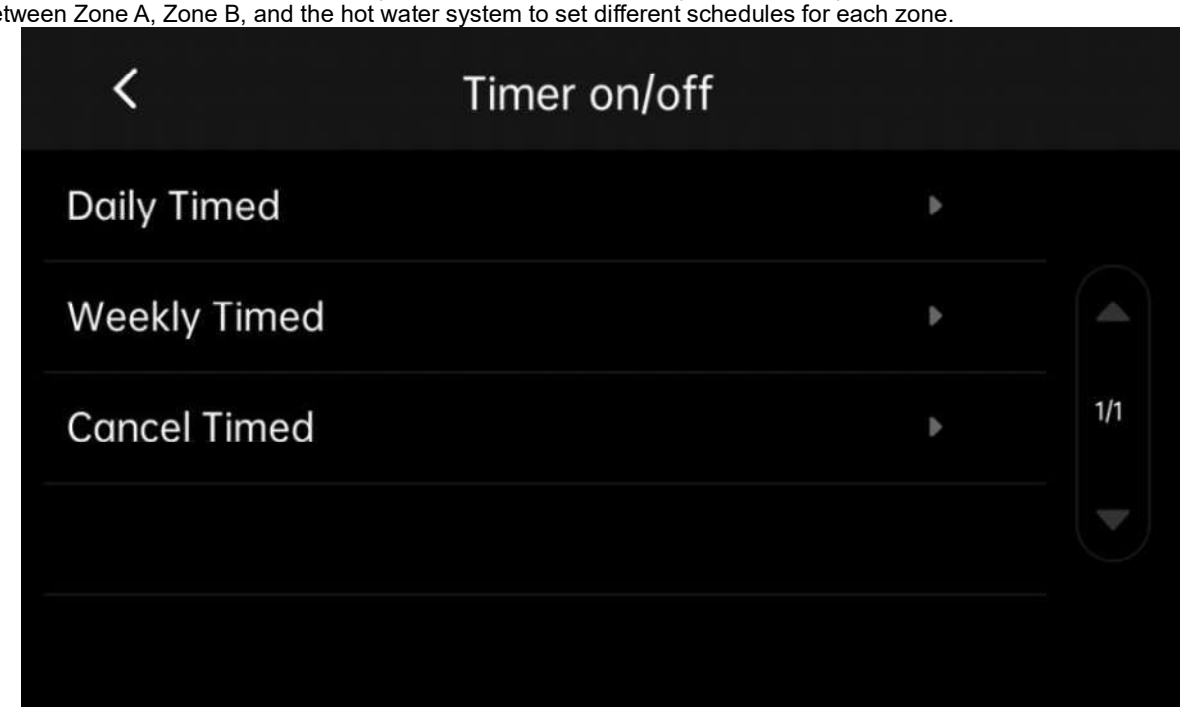

Daily Timer

Select “Daily Timer” to enter the daily timer settings interface. Within this interface, you can configure multiple timer schedules. Each schedule allows you to set its execution time, operating mode, and operating temperature independently. By turning the corresponding number on the left on or off, you can enable or disable that specific schedule.

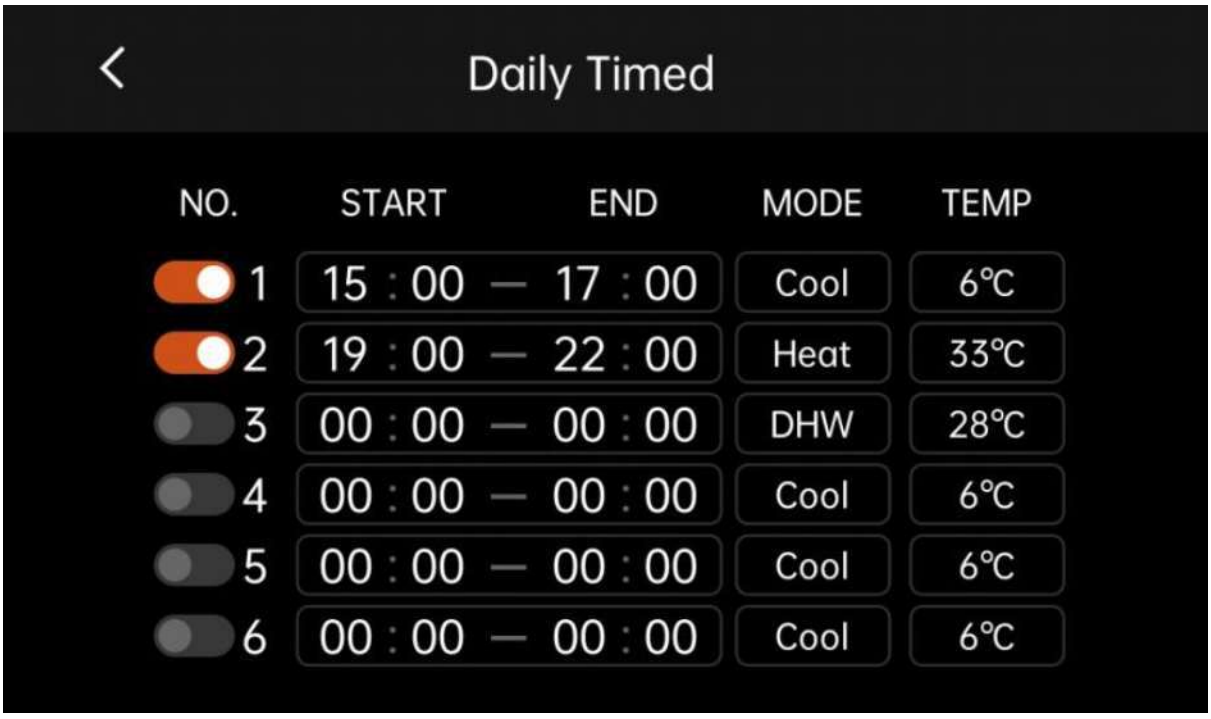

Example: Set the timer according to the following five groups in the table.

No.	Start Time	End Time	Mode	Set Temp.
1	1：00	6：00	DHW	50℃
2	7：00	9：00	Heating	30℃
3	11：00	13：00	Cooling	20℃
4	16：00	19：00	Cooling	20℃
5	20：00	22：00	DHW	50℃

Specific operational procedures for the unit are as follows:

Time	Unit Action
1：00	DHW Mode On
6：00	DHW Mode Off
7：00	Heating Mode On
9：00	Heating Mode Off
11：00	Cooling Mode On
13：00	Cooling Mode Off
16：00	Cooling Mode On
19：00	Cooling Mode Off
20：00	DHW Mode On
22：00	DHW Mode Off

Note: The timer settings for this group will be invalid if the start and end times are identical, the start time is later than the end time, the settings span multiple days, or the temperature exceeds the allowed range for this mode.

Weekly Timer

In the timer menu, select “Weekly Timer” to access it. Weekly Timer allows you to select specific days of the week to execute the daily timer schedule, based on the daily timer settings.

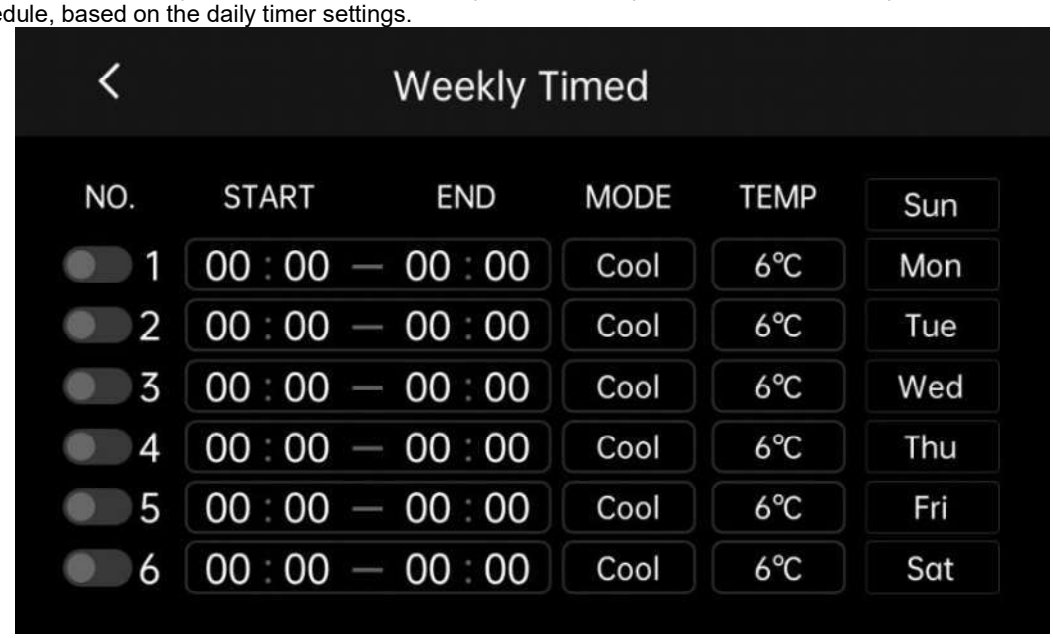

Note:

① Daily and weekly timers cannot be enabled simultaneously.

② Timer setup procedures are identical to normal power-on/off operations.

③ Timer groups will be invalid if:

- Start and end times are identical
- The time period overlaps with other timers
- Temperature exceeds the mode's permissible range

Cancel Timer

To cancel all scheduled power-on/off settings at once (without affecting other timed functions), follow the steps outlined in this section.
In the Timed Power On/Off menu, tap “Clear Timers.” A confirmation pop-up will appear; tap the checkmark (√) to confirm clearing the timers and close the pop-up.
If a daily or weekly timer is active, the timer icon will appear on the main interface. If a daily or weekly timer is inactive, the timer icon will not appear on the main interface.

5.5.2 Disinfection Function

The disinfection function is designed to eliminate bacteria and pathogens within the hot water tank. The tank temperature will be forced to reach 61-70 degrees Celsius (the exact value determined by the parameter “Disinfection Temperature”), which can be configured in the advanced settings.

Disinfection Timer

Before using the disinfection function, ensure that the parameter under ''User Parameters'' > [Scheduled Disinfection Function] is set to Enabled (refer to the parameter table in User Parameters for details). If this parameter is set to Disabled, the disinfection function will not be available. Below are instructions for scheduled and manual operation. For scheduled use:

On the main screen, press  to enter the menu. Locate and select “Timer Settings”. Click to choose “Scheduled Sterilization”.

After setting the start time, select the day or days of the week when it should take effect on the right side, show as below.

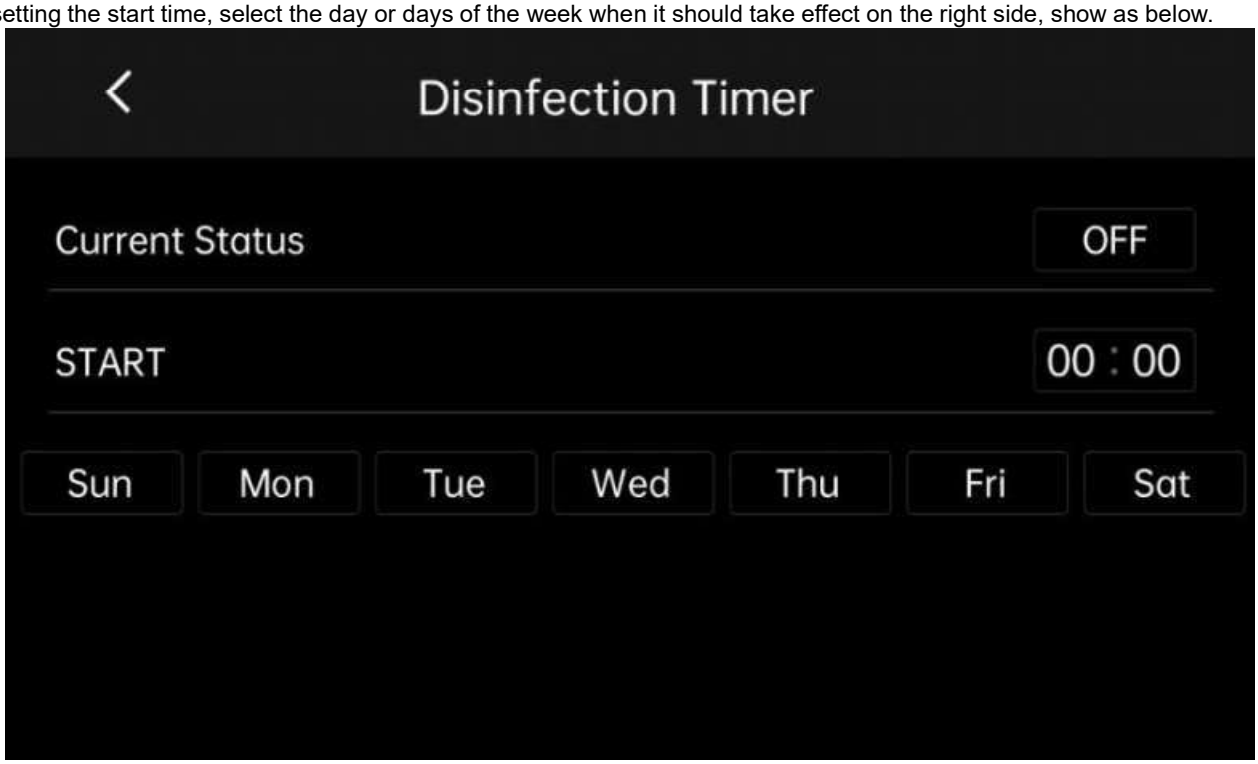

Manual disinfection

Manual control takes precedence over timed control. The manual disinfection function can be activated or deactivated by setting the “Current Status.”
If the current status is “Off,” manually click to activate the disinfection function.
If the current status is “On,” manually click to deactivate the disinfection function.

5.5.3 Silent timer

To prevent excessive noise during machine operation from affecting user experience or disturbing others, we can activate silent mode during specific periods to reduce noise levels. Silent mode offers two levels: Level 1 and Level 2. In Level 2 mode, the max. speed of the fan and compressor is lower than in Level 1.
Click to select “Scheduled Quiet Mode” to enter the settings interface. Within this interface, you can choose the quiet level (Level 1 or Level 2), as well as the start and end times.
There are two sets of scheduled times available. Use the toggle switch to the left of each set to enable or disable that specific schedule.



5.5.4 DHW Pump Timer

The DHW Pump Timer function returns water to the water network, enabling nearly instant hot water upon turning on the faucet without waiting for cold water to drain out. This significantly conserves water resources while enhancing user comfort.
By switching the timers for each numbered group, you can activate or deactivate the timer for that group. Setting the start time for the return water pump will achieve zero cold water flow at that moment.

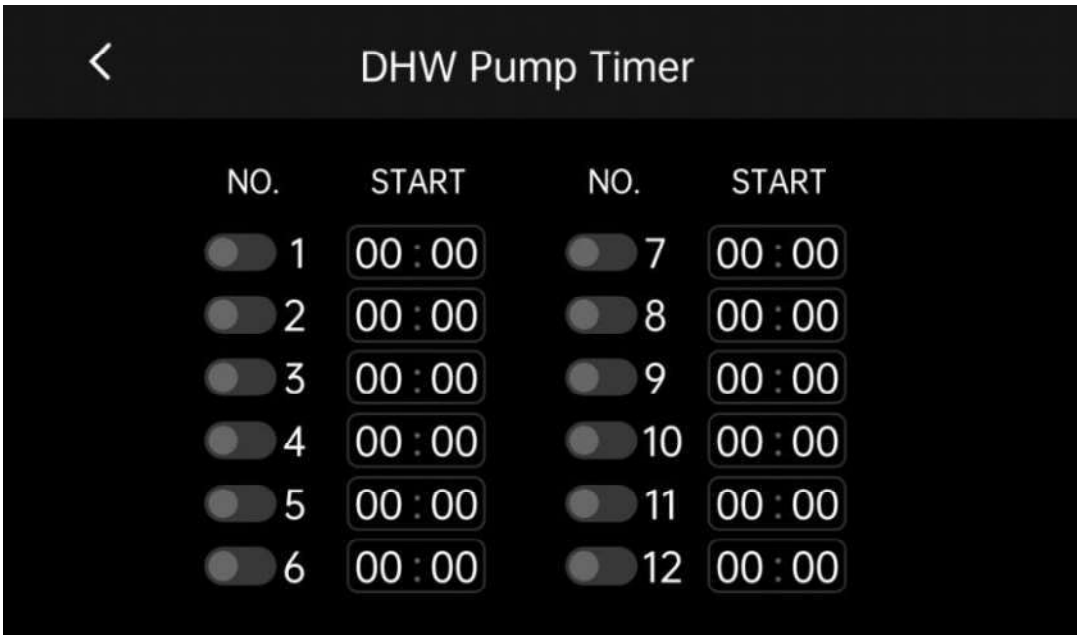

5.6 WiFi Setup

For details, please refer to the Network Setup User Manual.

5.7 User Parameter Settings

On the main interface, click to enter the settings menu, locate “User Parameter Settings,” and select it.
User parameters can be directly accessed by end users. The interface is shown in the figure below:

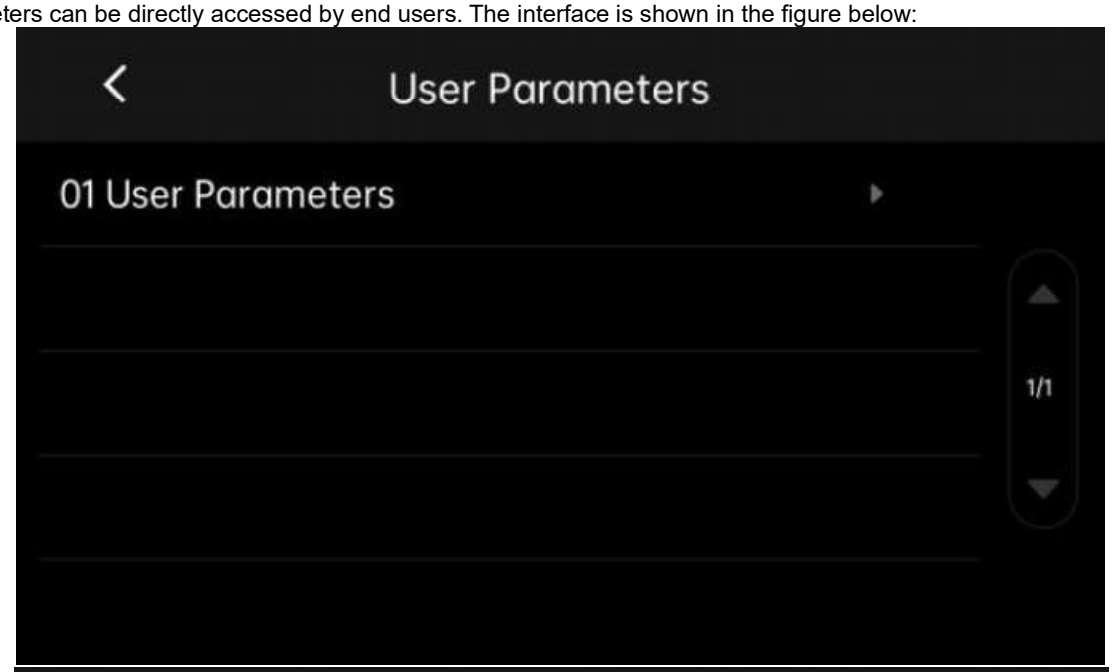

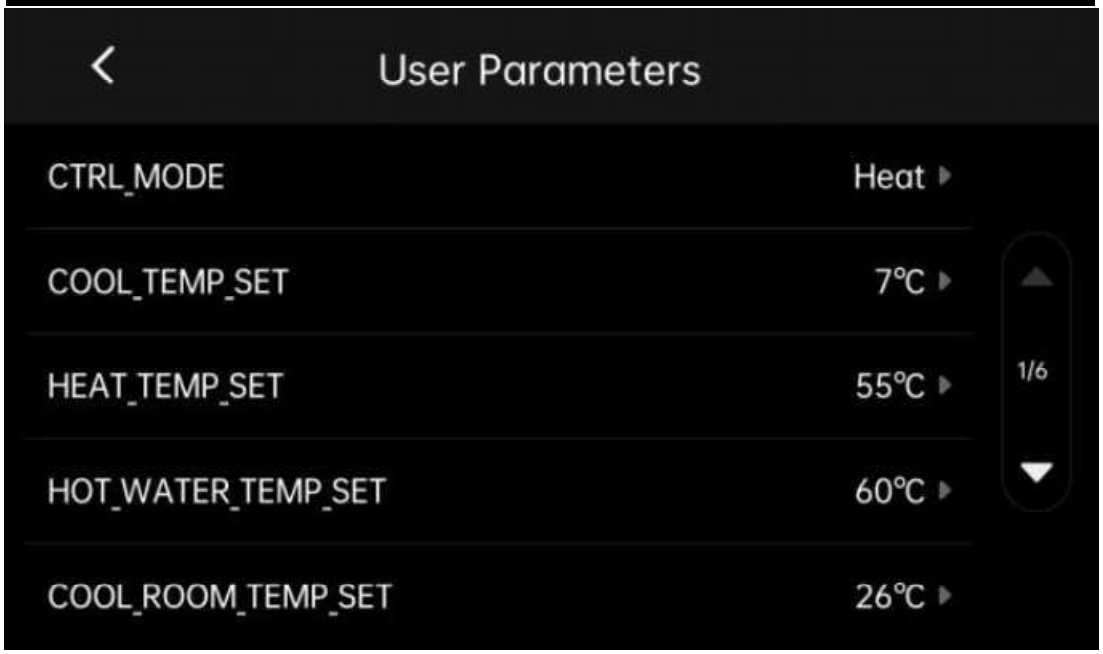

For additional user parameters, please refer to the table below (actual parameters are subject to the show on the display).

Setting Item	Setting Range	Unit
CTRL_MODE	Cooling Mode Heating Mode Auto Mode	
COOL_TEMP_SET	min…max	℃
HEAT_TEMP_SET	min…max	℃
HOT_WATER_TEMP_SET	min…max	℃
COOL_ROOM_TEMP_SET	16…30	℃
HEAT_ROOM_TEMP_SET	16…30	℃
HEAT_TEMP_SET_B	min…max	℃
HEAT_ROOM_TEMP_SET_B	16…30	℃
POWER_MODE	Standard/Turbo/Silent/Auto	
TIMED_DISINFECTION_FUNCTION	Disable/Enable	
DISINFECTION_TEMP	60…70	℃
DISINFECTION_CYCLE_MAX	90…300	Min
DISINFECTION_HIGH_TEMP_TIME	5…60	Min
Zone A Cool Curve	[0]Disable;[1]Low Temp. Curve1;[2]Low Temp. Curve2;[3]Low Temp. Curve3;[4]Low Temp. Curve4;[5]Low Temp. Curve5;[6]Low Temp. Curve6;[7]Low Temp. Curve7;[8]Low Temp. Curve8;[9]High Temp. Curve1;[10]High Temp. Curve2;[11]High Temp. Curve3;[12]High Temp. Curve4;[13]High Temp. Curve5;[14]High Temp. Curve6;[15]High Temp. Curve7;[16]High Temp. Curve8;[17]Curve9	
Zone A Heat Curve	[0]Disable;[1]Low Temp. Curve1;[2]Low Temp. Curve2;[3]Low Temp. Curve3;[4]Low Temp. Curve4;[5]Low Temp. Curve5;[6]Low Temp. Curve6;[7]Low Temp. Curve7;[8]Low Temp. Curve8;[9]High Temp. Curve1;[10]High Temp. Curve2;[11]High Temp. Curve3;[12]High Temp. Curve4;[13]High Temp. Curve5;[14]High Temp. Curve6;[15]High Temp. Curve7;[16]High Temp. Curve8;[17]Curve9	
Zone B Heat Curve	[0]Disable;[1]Low Temp. Curve1;[2]Low Temp. Curve2;[3]Low Temp. Curve3;[4]Low Temp. Curve4;[5]Low Temp. Curve5;[6]Low Temp. Curve6;[7]Low Temp. Curve7;[8]Low Temp. Curve8;[9]High Temp. Curve1;[10]High Temp. Curve2;[11]High Temp. Curve3;[12]High Temp. Curve4;[13]High Temp. Curve5;[14]High Temp. Curve6;[15]High Temp. Curve7;[16]High Temp. Curve8;[17]Curve9	
Curve#9_COOL_TA_1	-5…46	
Curve#9_COOL_TA_2	-5…46	
Curve#9_COOL_TWout2_1	5…25	
Curve#9_COOL_TWout2_2	5…25	
Curve#9_HEAT_TA_1	-25…35	
Curve#9_HEAT_TA_2	-25…35	
Curve#9_HEAT_TWout2_1	25…65	
Curve#9_HEAT_TWout2_2	25…65	
00#UNIT	[0]Disable;[1]Enable	
LED Strip Switch	On/Off	

Ambient Temp. Compensation Function

Ambient temperature compensation allows presetting the target water temperature based on external ambient conditions. When weather warms up, heating output is reduced. To conserve energy, the ambient temperature compensation function selects a lower target water temperature for heating when external ambient temperatures rise.
In the User Parameters interface, select one or more of the following as needed: “Zone A Cooling Curve,” “Zone A Heating Curve,” “Zone B Cooling Curve,” and “Zone B Heating Curve.” Choose to disable or use different “AT Compensation Function”
Note: Ambient temperature compensation curves are divided into cooling and heating modes, each employing distinct curves. For heating, there are 8 low-temperature curves, 8 high-temperature curves, and one curve generated by settings. For cooling, there are 8 low-temperature curves, 8 high-temperature curves, and one curve generated by settings. These curves are presented in tabular form in Appendix 1. Please refer to Appendix 1 for details.

5.8 Manual Defrost

During normal operation, the unit is equipped with an intelligent (automatic) defrost function. However, in certain special circumstances, manual defrosting may be required. Click  on the main interface to quickly access the manual defrost page.



On the manual defrost settings interface, the current status of each module is shown, such as module stopped, module running, and module defrosting.
Only when the module is in the running state and conditions like water temperature and fin temperature are met, clicking “Manual Defrost” will successfully initiate defrosting. At this point, the module's current status will switch to defrosting. Otherwise, it will remain in its original state.

5.9 Force Open Function

To enhance the system's heating efficiency and adaptability under specific conditions, ensuring effective heating across various climates and usage scenarios, this unit features functions such as underfloor heating drying, forced activation of auxiliary electric heating, and forced activation of water tank electric heating.

On the main interface, press  to enter the “Forced Open Function” page.

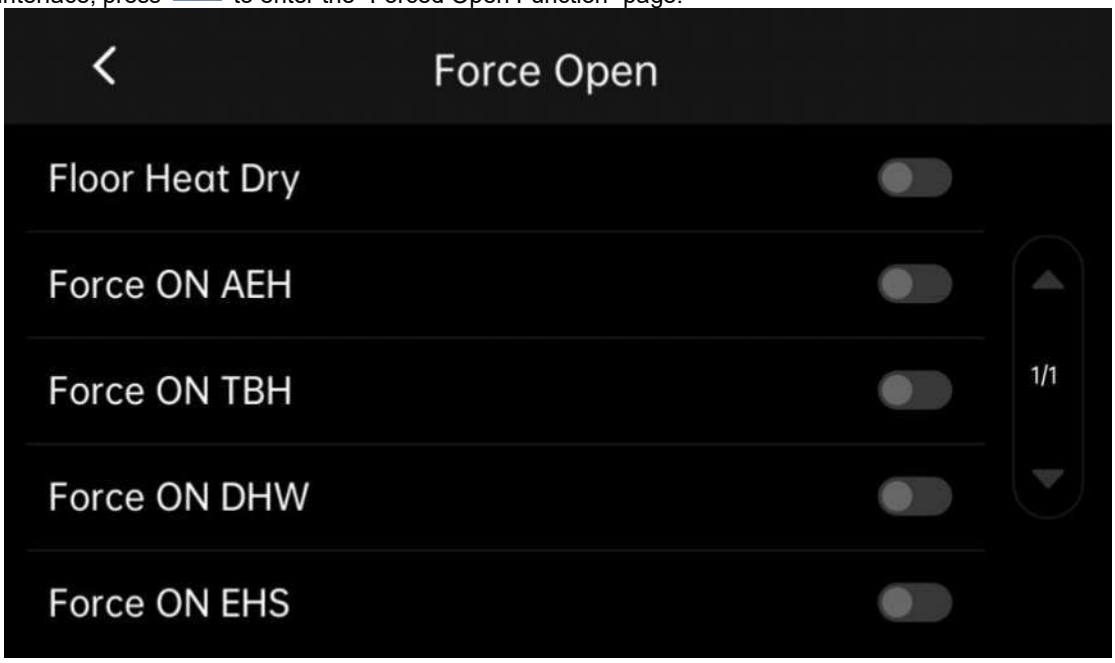

5.9.1 Floor Heating Drying Function

Using the floor heating drying function allows the floor heating system to reach optimal operating condition before formal commissioning. This ensures system performance and longevity while guaranteeing safe and efficient operation.
This function can only be activated when the [floor heating inlet temperature sensor] is in use and the unit is in standby mode.

5.9.2 Forced open auxiliary electric heater

Auxiliary electric heater can enhance the heating capacity of the unit during extremely cold weather conditions, but it consumes more energy. It is recommended to use this feature only as an emergency or supplementary measure when necessary.
This function can only be activated when [Auxiliary Electric Heater] is enabled and the unit is operating in heating mode.

5.9.3 Force open water tank heater

Force-open water tank heater enables rapid water heating by forcibly activating the tank's electric heating element, enhancing user experience.
When the system requires cooling or heating and the heat pump operates in cooling or heating mode, hot water demand may arise. The force-open water tank heater function can then be used to produce hot water.

5.9.4 Forced open DHW mode

The Forced DHW Mode function compels the system to operate in hot water production mode. During this mode, the heat pump, auxiliary electric heating, water tank electric heating, and external heat sources will all activate provided their respective conditions are met.

5.9.5 Force open external heat source

External heat sources primarily refer to heat sources other than the heat pump itself, including natural gas boilers, industrial waste heat recovery, and geothermal energy. Integrating these existing external heat sources within the user's home enhances the stability of the heating system.
In heating or DHW mode, external heat sources can be manually activated to provide additional heat.

5.10 Holiday Mode

5.10.1 Holiday Away Mode

Holiday Away Mode is commonly used during winter vacations to prevent water pipes from freezing. Activate this mode after leaving home and deactivate it before returning. Access the Holiday Away Mode settings interface.

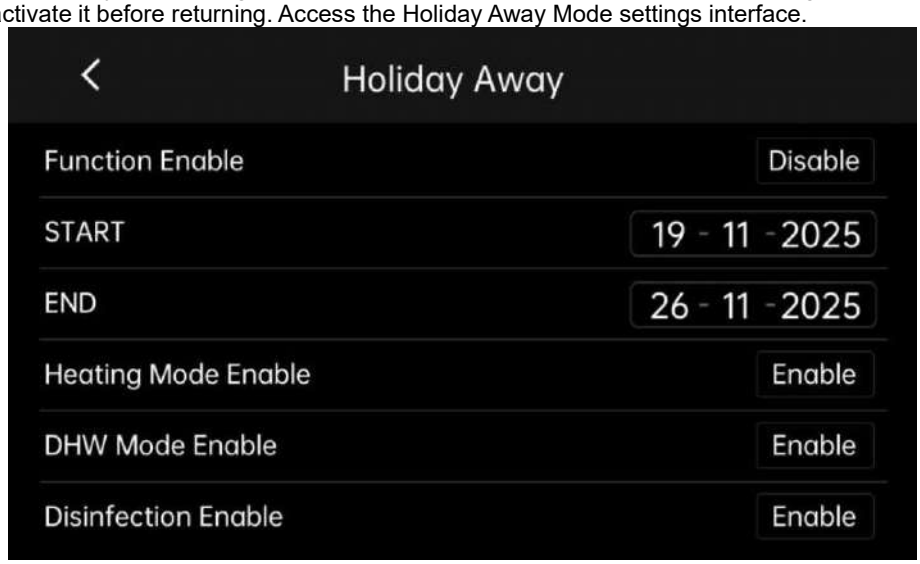

Application Example: Suppose the current date is January 3, 2025. You will be away for two weeks starting three days later, departing on January 6, 2025, and returning on January 20, 2025. To prevent water pipes from freezing, configure settings as shown in the table below.

Parameter Name	Parameter Value
Function Usage	Use
Start	06-01-2025
End	20-01-2025
Heating Mode Usage	Use
DHW Mode Usage	Use

5.10.2 Holiday Stay-at-Home Mode

Holiday At Home mode functions similarly to Scheduled mode. When Holiday At Home mode is active, any scheduled settings will be invalidated.

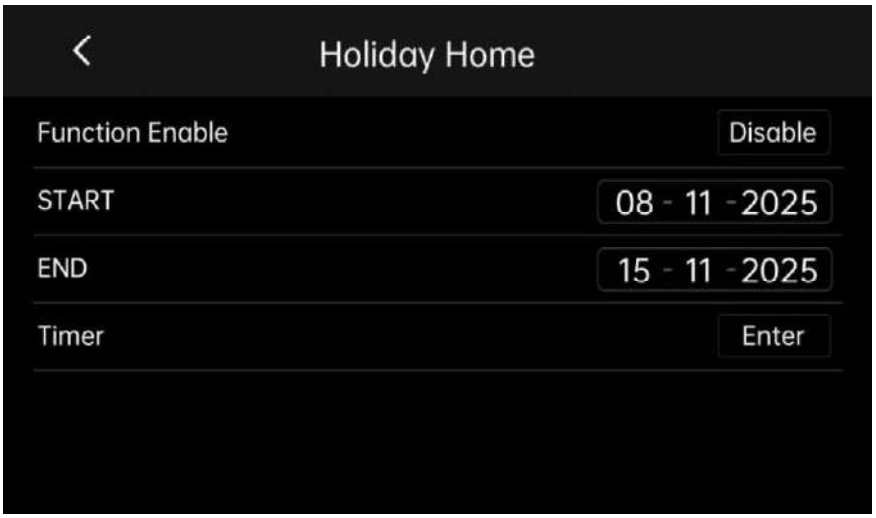

For example, if the Holiday At Home function is enabled and set to activate from July 1, 2025, to August 8, 2025, the regular scheduled function will operate before July 1, 2025, and after August 8, 2025. During the period from July 1, 2025, to August 8, 2025, the Holiday At Home function will be executed.

5.11 Fault Inquiry Interface



5.11.1 Current fault

Click the fault code on the main interface to view the current fault page.

In the current fault section, if a fault is present, the current fault interface appears as shown below (click the reset button to clear all faults meeting the reset conditions).

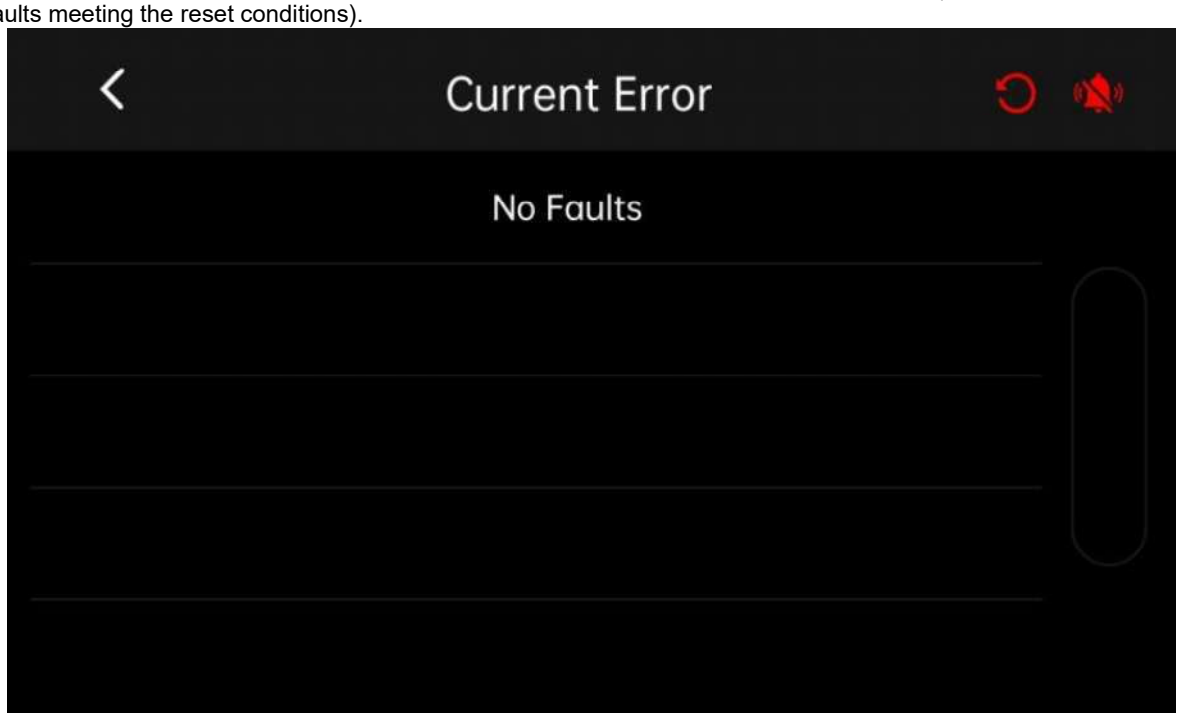

5.11.2 Historical faults

All faults that have occurred on the unit (including those that have been reset) are recorded in the controller and can be queried in the historical faults section.

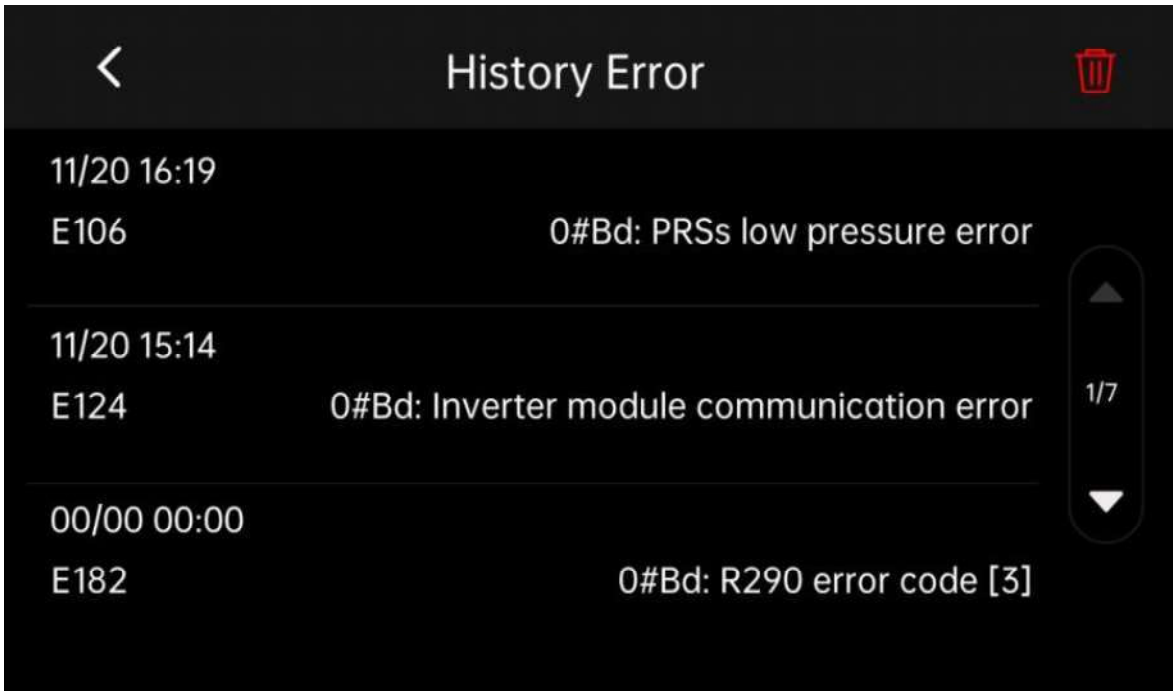

This interface shows the fault code, occurrence time, and fault description for each past incident.

Clicking the " Clear" button will erase all historical faults. Please exercise caution before proceeding to avoid accidental deletion.

5.12 Zone Settings

This interface allows you to view and configure the on/off status of Zones A and B, the temperatures of Zones A and B, the heat pump inlet and outlet temperatures, the hot water tank temperature, and the buffer tank temperature.

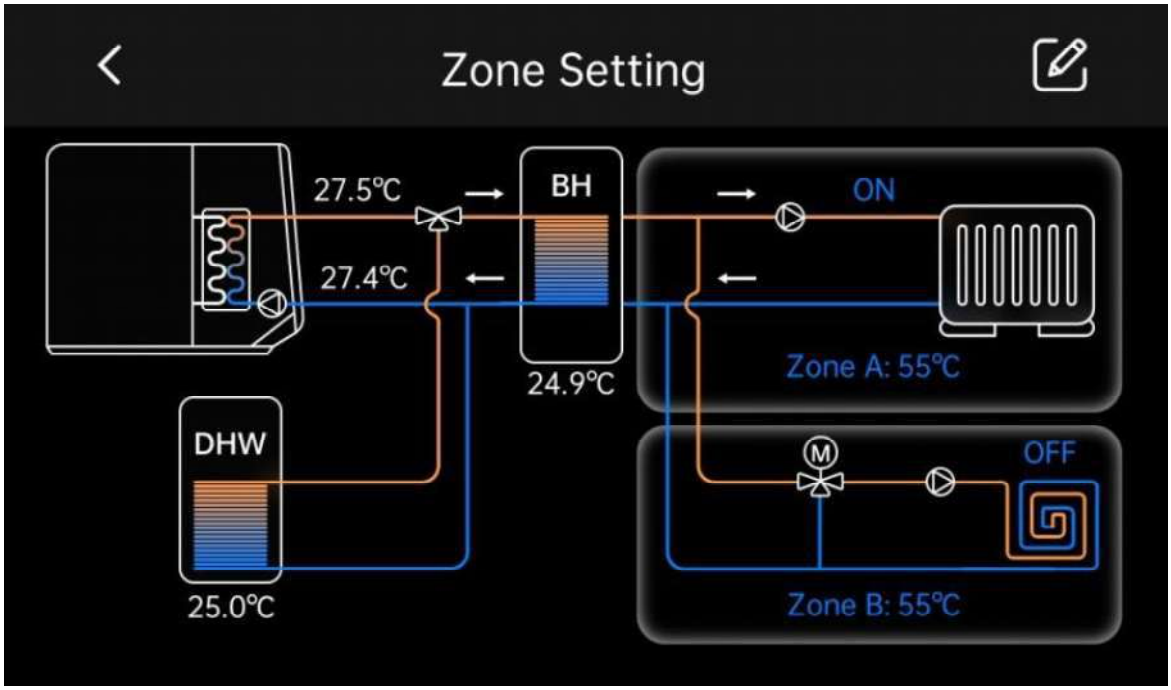

Click the button to configure the parameters and switches for zone control.



5.13 Power consumption

This interface allows you to view the machine's recent power consumption, broken down by the last 24 hours, the last 30 days, the last 12 months, and the last 10 years.



6 Wiring Diagram

6.1 iGXC08

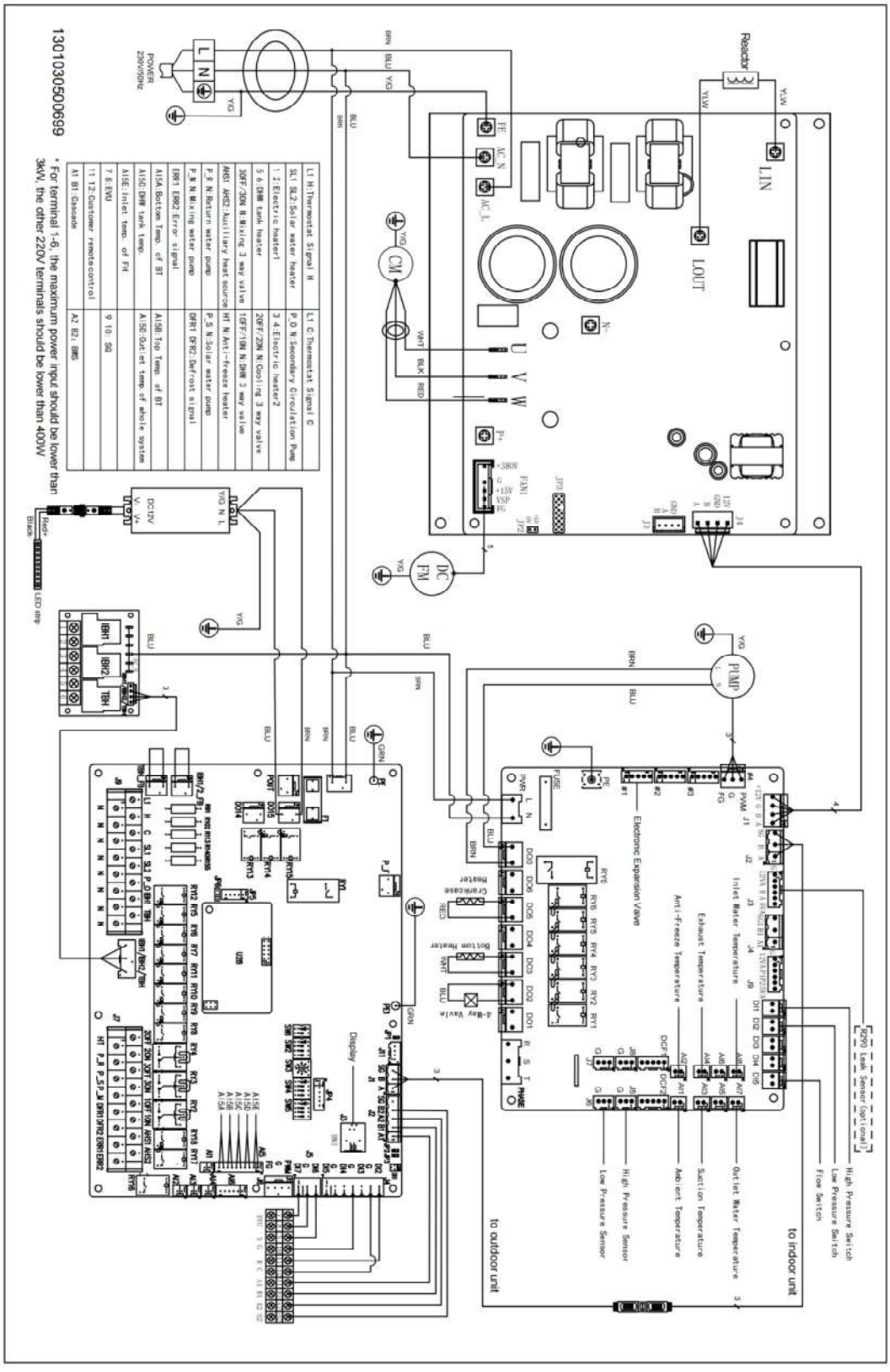

6.2 iGXC11

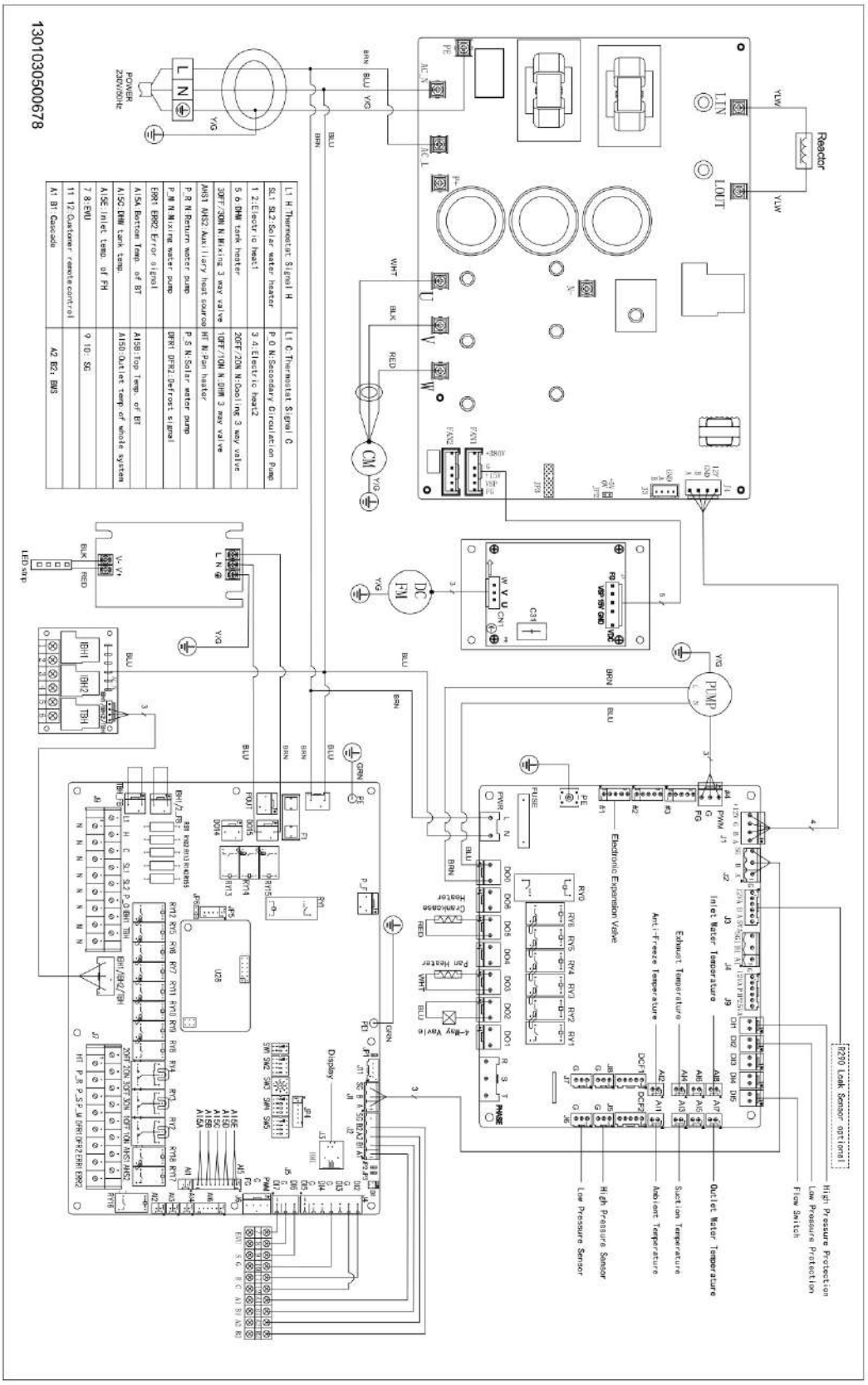
1301030500678
L1 H:Thermostat Signal H
SL1 SL2:Solar water heater
5 6 DHW tank heater
3OFF/3ON N:Mixing 3 way valve
P_R N:Return water pump
P_M N:Mixing water pump
ERR1 ERR2 Error signal
AI5A Bottom Temp. of BT
AI5B DHW tank temp.
AI5C Inlet temp. of FH
7 8:EVU
11 12: Customer remote control
A1 B1: Cascade
L1 C:Thermostat Signal C
P_O N:Secondary Circulation Pump
1 2:Electric heat1
3 4:Electric heat2
20TF/2ON N:Cooling 3 way valve
AHS1 AHS2:Auxiliary heat source
P_H N:Pan heater
P_S N:Solar water pump
DFR1 DFR2:Defrost signal
AI5D Outlet temp of whole system
9 10: SG
A2 B2: BMS
POWER 230V/50Hz
Reactor
PUMP
Electronic Expansion Valve
Inlet Water Temperature
Exhaust Temperature
Anti-Freeze Temperature
Outlet Water Temperature
Suction Temperature
Ambient Temperature
High Pressure Sensor
Low Pressure Sensor
High Pressure Protection
Low Pressure Protection
Flow Switch
R290 Leak Sensor optional
Display
4-Way Valve
Crankcase Heater
Pan Heater

6.3 iGXC11T

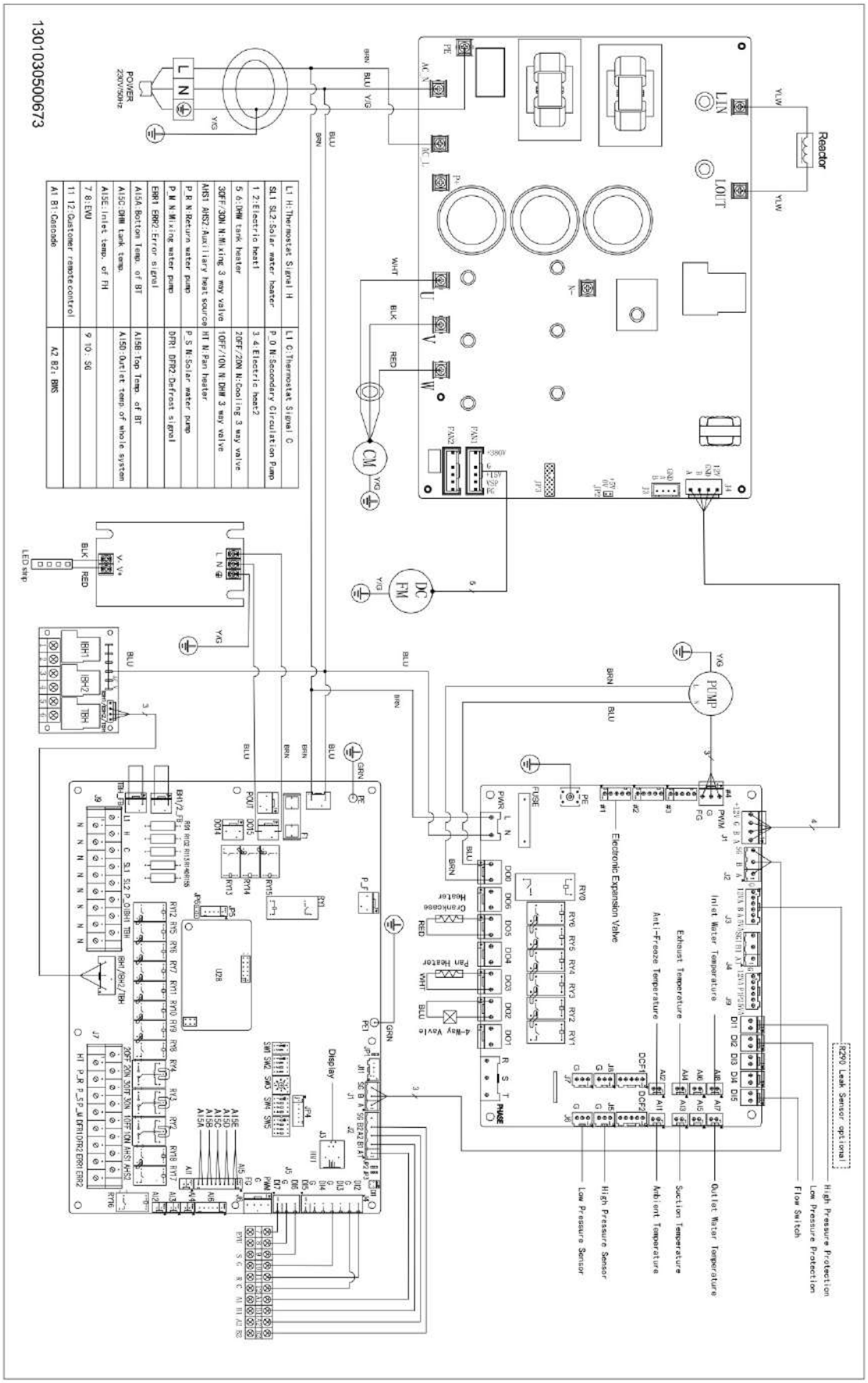

1301030500673
L1 H:Thermostat Signal H
SL1 SL2:Solar water heater
1 2:Electric heat1
5 6:DHW tank heater
30FF/30N N:Mixing 3 way valve
AHS1 AHS2:Auxiliary heat source
P_R N:Return water pump
P_N N:Mixing water pump
ERR1 ERR2:Error signal
AI5A:Bottom Temp. of BT
AI5C:DHW tank temp.
AI5E:Inlet temp. of FH
7 8:EVU
11 12:Customer remote control
A1 B1:Cascade
L1 C:Thermostat Signal C
P_O N:Secondary Circulation Pump
3 4:Electric heat2
20FF/20N N:Cooling 3 way valve
10FF/10N N:DHW 3 way valve
HT N:Pan heater
P_S N:Solar water pump
DFR1 DFR2:Defrost signal
AI5B:Top Temp. of BT
AI5D:Outlet temp. of whole system
9 10: SG
A2 B2: BMS
Reactor
LIN
LOUT
POWER
230V/50Hz
CM
DC FM
PUMP
LED strip
Electronic Expansion Valve
Inlet Water Temperature
Exhaust Temperature
Anti-Freeze Temperature
Crankcase Heater
Pan Heater
4-Way Valve
Display
R290 Leak Sensor optional
High Pressure Protection
Low Pressure Protection
Flow Switch
Outlet Water Temperature
Suction Temperature
Ambient Temperature
High Pressure Sensor
Low Pressure Sensor

6.4 iGXC13

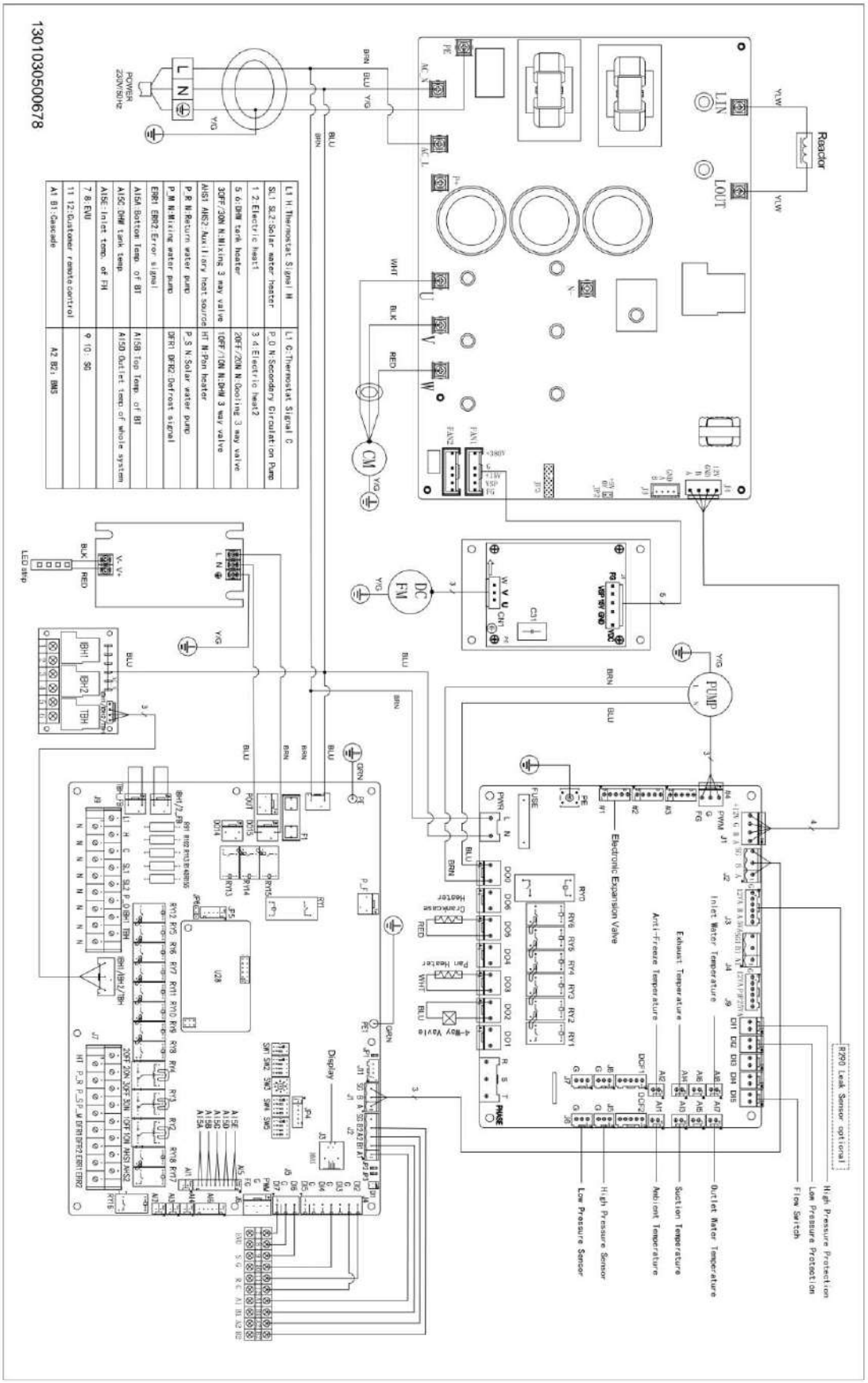
130103050067S
L1 H Thermostat Signal H
SL1 SL2:Solar water heater
1 2 Electric heat1
5 6:DHW tank heater
3OFF/3ON N:Mixing 3 way valve
AHS1 AHS2:Auxiliary heat source
P_R N:Return water pump
P_M N:Mixing water pump
ER1 ER2 Error signal
A15A Bottom Temp. of BT
A15C DHW tank temp
A15E Inlet temp. of FH
7 8 EVU
11 12:Customer remote control
A1 B1:Cascade
L1 C:Thermostat Signal C
P_O N:Secondary Circulation Pump
3 4:Electric heat2
2OFF/2ON N:Cooling 3 way valve
1OFF/1ON N:DHW 3 way valve
HT N:Pan heater
P_S N:Solar water pump
DFR1 DFR2:Defrost signal
A15B Top Temp. of BT
A15D Outlet temp of whole system
9 10: SG
A2 B2: BMS
POWER 230V/50Hz
Reactor
LIN
LOUT
CM
DC FM
PUMP
Electronic Expansion Valve
Inlet Water Temperature
Exhaust Temperature
Anti-Freeze Temperature
Ambient Temperature
Suction Temperature
Outlet Water Temperature
High Pressure Sensor
Low Pressure Sensor
High Pressure Protection
Low Pressure Protection
Flow Switch
R290 Leak Sensor optional
4-Way Valve
Pan Heater
Display

6.5 iGXC13T

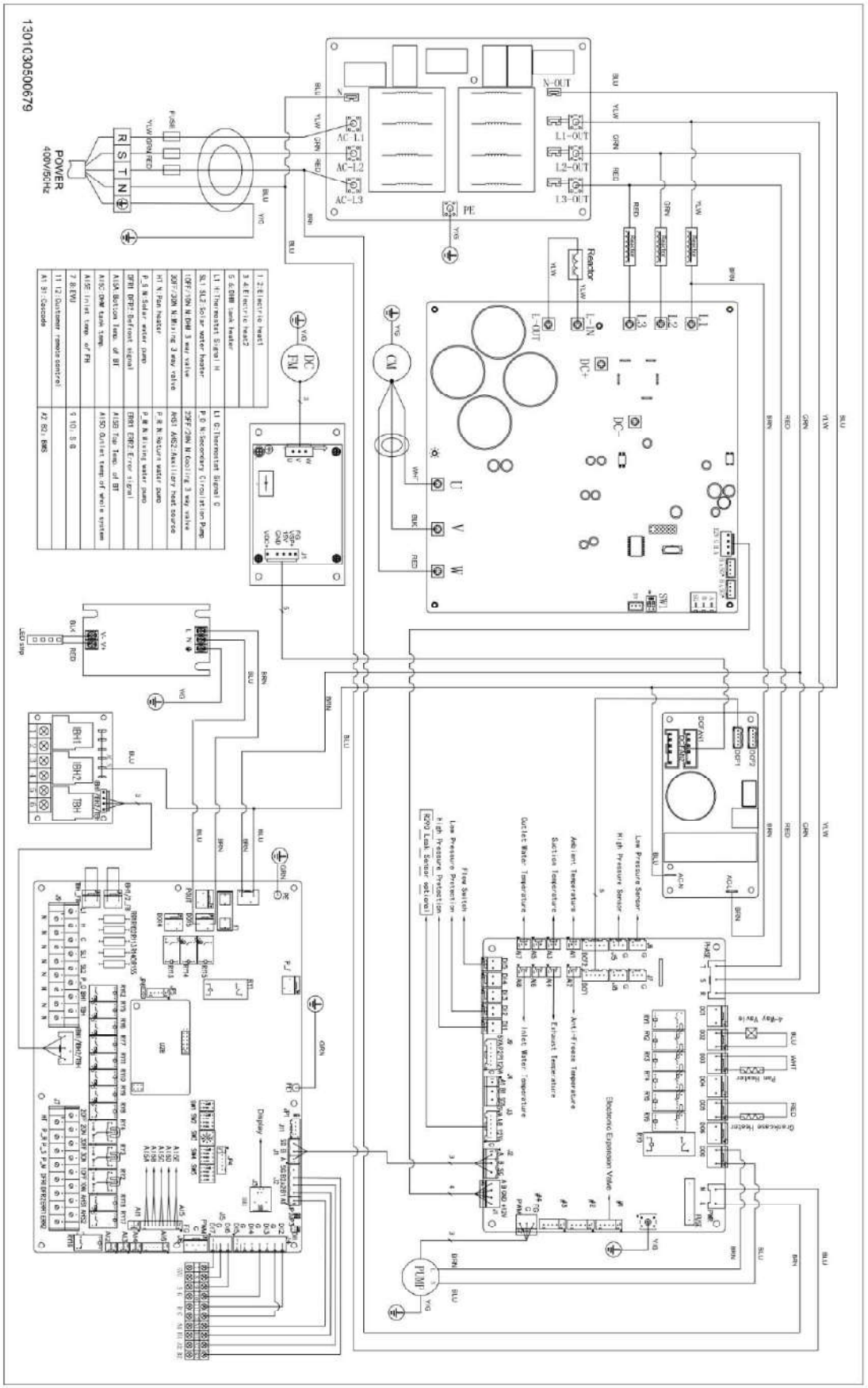

1301030500679
POWER
400V/50Hz
R
S
T
N
AC-L1
AC-L2
AC-L3
N-OUT
L1-OUT
L2-OUT
L3-OUT
PE
Reactor
L-OUT
L-IN
L1
L2
L3
DC+
DC-
CM
U
V
W
SW1
DC
FM
IBH1
IBH2
TBH
PUMP
Display
Low Pressure Sensor
High Pressure Sensor
Ambient Temperature
Suction Temperature
Outlet Water Temperature
Flow Switch
Low Pressure Protection
High Pressure Protection
R290 Leak Sensor optional
Anti-Freeze Temperature
Exhaust Temperature
Inlet Water Temperature
Electronic Expansion Valve
4-Way Valve
Pan Heater
Crankcase Heater

6.6 iGXC16

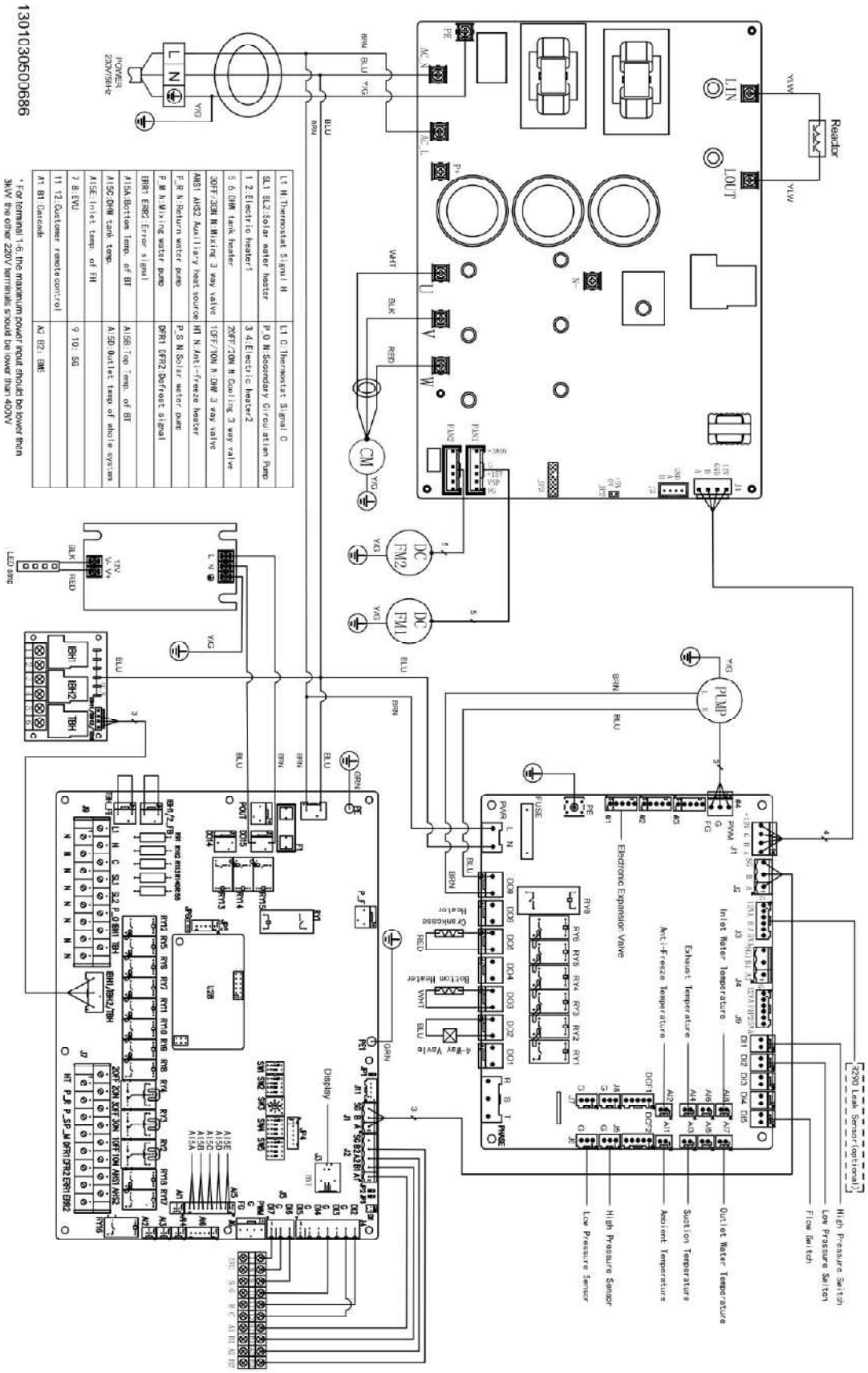
1301130500686
L1 H:Thermostat Signal H
L1 O:Thermostat Signal O
SL1 SL2:Solar water heater
P_O N:Secondary Circulation Pump
1 2:Electric heater1
3 4:Electric heater2
5 6:DHW tank heater
20FF/20N N:Cooling 3 way valve
30FF/30N N:Mixing 3 way valve
10FF/10N N:DHW 3 way valve
AHS1 AHS2:Auxiliary heat source
HT N:Anti-Freeze heater
P_R N:Return water pump
P_S N:Solar water pump
P_M N:Mixing water pump
DFR1 DFR2:Defrost signal
ERR1 ERR2:Error signal
A15A:Bottom temp. of BT
A15B:Top temp. of BT
A15C:DHW tank temp.
A15D:Outlet temp of whole system
A15E:Inlet temp. of FH
7 8:ENV
9 10: 5G
11 12:Customer remote control
A1 B1:Cascade
A2 B2: RS485
* For terminal 1-6, the maximum power input should be lower than 3kW the other 220V terminals should be lower than 400W
POWER 230V/50Hz
Reador
Display
Electronic Expansion Valve
Inlet Water Temperature
Exhaust Temperature
Anti-Freeze Temperature
Outlet Water Temperature
Suction Temperature
Ambient Temperature
High Pressure Sensor
Low Pressure Sensor
High Pressure Switch
Low Pressure Switch
Flow Switch
R290 Leak Sensor(optional)
4-Way Valve
Bottom Heater
Crankcase Heater
PUMP
FM1
FM2
CM

6.7 iGXC16T

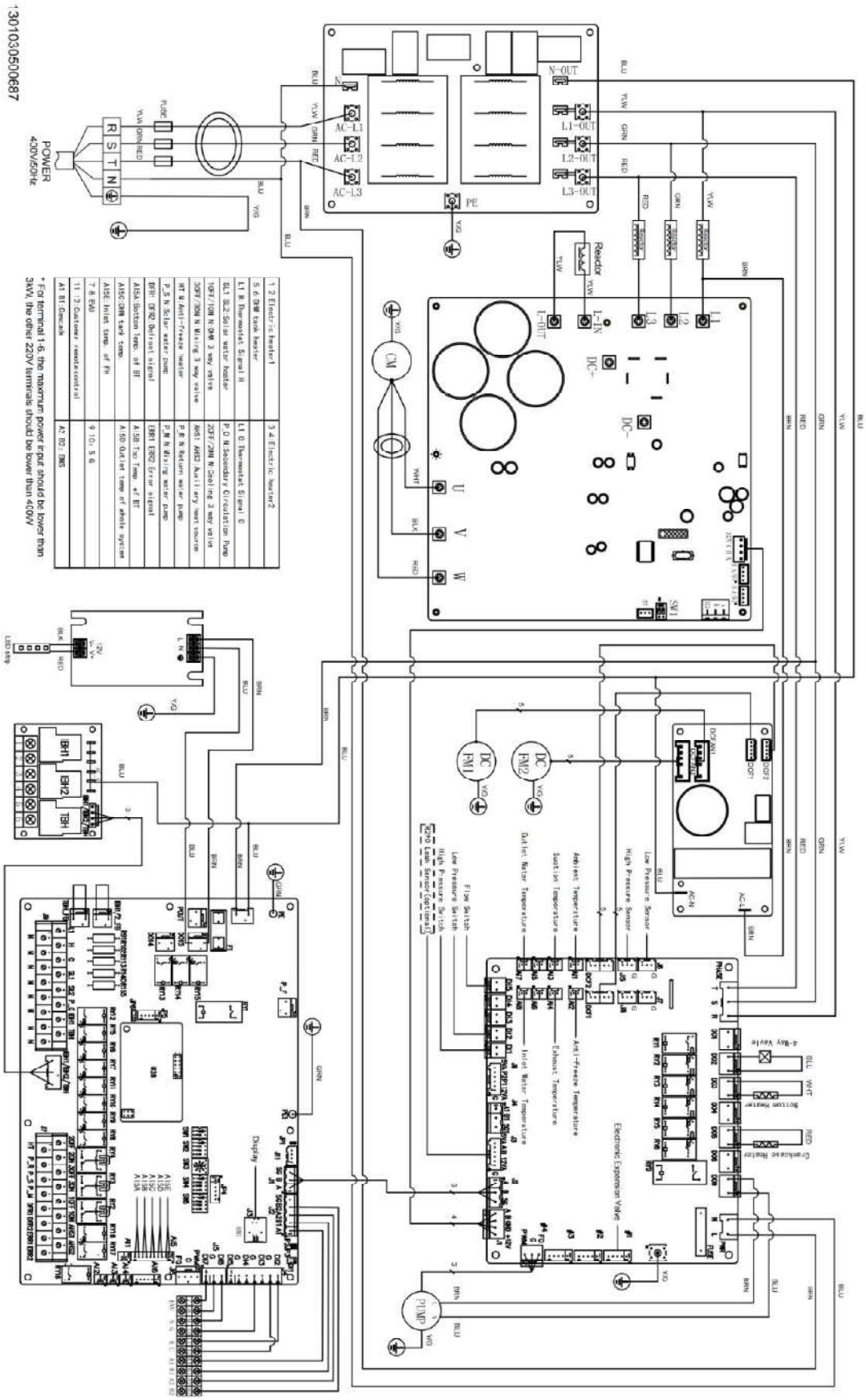

1301030500687
POWER
400V/50Hz
R S T N
AC-L1
AC-L2
AC-L3
N-OUT
L1-OUT
L2-OUT
L3-OUT
PE
Reactor
L-OUT
L-IN
L1
L2
L3
DC+
DC-
CM
U
V
W
SW1
DC FM1
DC FM2
Low Pressure Sensor
High Pressure Sensor
Ambient Temperature
Suction Temperature
Outlet Water Temperature
Flow Switch
Low Pressure Switch
High Pressure Switch
Inlet Water Temperature
Exhaust Temperature
Anti-Freeze Temperature
Electronic Expansion Valve
4-Way Valve
Bottom Heater
Crankcase Heater
PUMP
Display

7 Care and Maintenance

7.1 Keeping the product clear

1. Regularly clear away branches and leaves that accumulate around the product.
2. Regularly clean leaves and dirt from the ventilation grille beneath the product.
3. Regularly clear snow from both the air inlet grille and the air outlet grille.
4. Regularly clear snow that accumulates around the product.

7.2 Cleaning the product

Clean the casing with a damp cloth and a small amount of solvent-free soap.
Never use sprays, scouring agents, detergents, solvents, or chlorine-containing cleaning agents.

7.3 Carrying out maintenance work

Neglected, improper maintenance, or incorrect repairs can result in personal injury or product damage.
- Never attempt to perform maintenance or repairs on the product.
- Have such work carried out by an authorized installation company. We recommend entering into a maintenance contract.

8 Troubleshooting

8.1 Solving problems based on symptoms

If you notice a cloud of vapor on the product, no action is needed. This phenomenon may occur during the defrosting process and is normal. For more information on diagnosing other phenomena, please refer to the following.

8.1.1 Symptom: The unit is NOT heating or cooling as expected

Possible causes	Corrective action
The temperature setting is NOT correct	Check the temperature setting on the remote controller.
The water flow is too low	Check and make sure that: - All shut-off valves of the water circuit are completely open. - The water filters are clean. Clean if necessary. - There is no air in the system. Purge air if necessary. - The water pressure is >1 bar. - The expansion vessel is NOT broken. - The valve (if equipped) of the water circuit towards the expansion vessel is open. - The resistance in the water circuit is NOT too high for the pump If the problem persists after you have conducted all of the above checks, contact your dealer. In some cases, it is normal that the unit decides to use a low water flow.
The water volume in the installation is too low	Make sure that the water volume in the installation is above the minimum required value
Fins are dirty	Clean the evaporator coil
Air inlet blocked	Remove any objects obstructing air circulation of the unit.
Insufficient refrigerant	Check the unit for leaks, repair if any. Evacuate all refrigerant and recharge the unit with correct amount.

8.1.2 Symptom: Hot water does NOT reach the desired temperature

Possible causes	Corrective action
One of the tank temperature sensors is broken.	See the service manual of the unit for the corresponding corrective action.

8.1.3 Symptom: The compressor does NOT start

Possible causes	Corrective action
No power supply	Check the power supply
Fuse blown or circuit breaker tripped	Check if the unit is open-circuited or grounded. Then replace the fuse, reset the circuit breaker, and check if the circuit is stable or well connected.
Some protection activated	Check which protection is working, clear the protection, then restart the unit.
Loose wiring	Check wire connections and tighten screws on terminals
Compressor failure	Replace the compressor
The unit may operate out of its operating range	Too low ambient temperature

8.1.4 Symptom: The system is making gurgling noises after commissioning

Possible causes	Corrective action
There is air in the system.	Purge air from the system.
Incorrect hydraulic balance.	To be performed by the installer: - Perform hydraulic balancing to assure that the flow is correctly distributed between the emitters. - If hydraulic balancing is not sufficient, change the pump limitation settings The water pressure must be larger than or equal to 1.5 bar. Verify that the expansion vessel is not broken. Verify that the pre-pressure of the expansion vessel is set correctly.
Various malfunctions.	Check if or is displayed on the home screen of the user interface.
Valves in the water system are not fully open	Check all valves to ensure they are fully open
Water filter dirty or clogged	Clean the water filter

8.1.5 Symptom: The pump is making noise (cavitation)

Possible causes	Corrective action
There is air in the system.	Purge air from the system.
The water pressure at the pump inlet is too low	Check and make sure that: - The water pressure is >1 bar. - The water pressure sensor is not broken. - The expansion vessel is NOT broken. - The valve (if equipped) of the water circuit towards the expansion vessel is open. - The pre-pressure setting of the expansion vessel is correct

8.1.6 Symptom: The pressure relief valve opens

Possible causes	Corrective action
The expansion vessel is broken	Replace the expansion vessel.
The valve (if equipped) of the water circuit towards the expansion vessel is closed.	Open the valve.
The water volume in the installation is too high	Make sure that the water volume in the installation is below the maximum allowed value
The water circuit head is too high	The water circuit head is the difference in height between the indoor unit and the highest point of the water circuit. If the indoor unit is located at the highest point of the installation, the installation height is considered 0 m. The maximum water circuit head is 10 m. Check the installation requirements.
Water pressure in the installation higher than 0.3MPa.	Make sure that the water pressure in the installation is within 0.10 to 0.20 MPa.

8.1.7 Symptom: The water pressure relief valve leaks

Possible causes	Corrective action
Dirt is blocking the water pressure relief valve outlet	Check whether the pressure relief valve works correctly by turning the red knob on the valve counterclockwise: - If you do NOT hear a clacking sound, contact your dealer. - If the water keeps running out of the unit, close both the water inlet and outlet shut-off valves first and then contact your dealer.

8.1.8 Symptom: Insufficient space heating capacity at low outdoor temperature.

Possible causes	Corrective action
The backup heater operation is not activated	Check the following: - The backup heater operation mode is enabled. - The backup heater overcurrent circuit breaker is on. If not, turn it back on.
The backup heater equilibrium temperature has not been configured correctly	Increase the equilibrium temperature to activate the backup heater operation at a higher outdoor temperature.
There is air in the system.	Purge air manually or automatically.

8.1.9 Symptom: The pressure at the tapping point is temporarily unusually high.

Possible causes	Corrective action
Failing or blocked pressure relief valve.	- Flush and clean the complete tank including the piping between pressure relief valve and the cold water inlet. - Replace the pressure relief valve.

If the above measures are ineffective or you do not want to check it yourself, please contact your dealer.

8.2 Troubleshooting Based on error codes

If the unit develops a fault, the user interface will display an error code. It is crucial to identify the issue and take appropriate measures before resetting the error code. This task should be performed by a licensed installer or your local dealer.

Error Code Instruction

Error code	Error name	Review and resolve
E1	Phase Reversal Protection	1.Check the wiring sequence of the three-phase power supply
E2	EEPROM Data Error	1.Initialize all parameters 2.If the issue is not resolved after initialization, contact your supplier
E6	System Maintenance Data Error	1.Initialize system maintenance settings 2.If the issue is not resolved after initialization, contact your supplier
E7	Phase Loss Protection	1.Check if the three-phase power supply is normal.
E10	DHW Heater Overheat Protection	1.Check whether the wiring of hot water tank electric heater is normal
E12	DHW Tank Temp. Sensor Fault	1.Check whether the sensor is connected normally 2.Check whether the sensor is normal
E14	System Total Outlet Temp. Sensor Fault	1.Check whether the sensor is connected normally 2.Check whether the sensor is normal
E15	Floor Heating Inlet Temp. Sensor Fault	1.Check whether the sensor is connected normally 2.Check whether the sensor is normal
E80	Buffer Tank Top Temp. Sensor Fault	1.Check whether the sensor is connected normally 2.Check whether the sensor is normal
E81	Buffer Tank Bottom Temp. Sensor Fault	1.Check whether the sensor is connected normally 2.Check whether the sensor is normal
E82	Solar Water Heater Temp. Sensor Fault	1.Check whether the sensor is connected normally 2.Check whether the sensor is normal
E83	Display Communication Fault	1. Check whether the mainboard and display is correctly connected. 2. Check whether the mainboard is supplying power normally.
E84	Air Conditioner Total Outlet Temp. Sensor Fault	1.Check whether the sensor is connected normally 2.Check whether the sensor is normal
E85	Room Temp. Sensor Fault	1.Check whether the sensor is connected normally 2.Check whether the sensor is normal
E97	Compressor Low Pressure Protection	1.Check whether the low-pressure signal input status of the compressor is normal.
E98	Compressor High Pressure Protection	1.Check whether the high-pressure signal input status of the compressor is normal.
E101	Coil Temp. Sensor Fault	1.Check whether the sensor is connected

Error code	Error name	Review and resolve
		normally 2.Check whether the sensor is normal
E102	Exhaust Temp. Sensor Fault	1.Check whether the sensor is connected normally 2.Check whether the sensor is normal
E103	Exhaust Temp. Overheat Protection	1.Check if the temperature sensor connection is normal 2.Check if there is insufficient refrigerant
E104	High Pressure Sensor Fault	1.Check if the pressure sensor is properly connected. 2.Check if the pressure sensor is normal.
E105	Low Pressure Sensor Fault	1.Check if the pressure sensor is properly connected. 2.Check if the pressure sensor is normal.
E106	Pressure Value Too Low Protection	1.Check the low-pressure value
E107	Pressure Value Too High Protection	1.Check the high-pressure value
E108	Suction Temp. Sensor Fault	1.Check whether the sensor is connected normally 2.Check whether the sensor is normal
E109	Fault of the Temp. Sensor After EEV	1.Check whether the sensor is connected normally 2.Check whether the sensor is normal
E110	Suction Temp. Too Low Protection	1.Check if the refrigerant quantity is normal.
E111	Frequent Defrosting Protection	1.Check if the refrigerant quantity is normal.
E112	Abnormal Suction-exhaust Temp. Difference Protection	1.Check whether the suction temperature and exhaust temperature are normal.
E113	Low Evaporation Pressure Protection In Cooling	1.Check low-pressure value 2.Check if the temperature after the EEV is normal
E115	Low Ambient Temp. Protection	1.Check whether the ambient temperature sensor is normal.
E116	Plate Heat Exchanger Inlet Water Temp. Too Low	1.Check whether the plate heat exchanger outlet temperature and return temperature are normal.
E117	Plate Heat Exchanger Inlet Water Temp. Too High	1.Check whether the plate heat exchanger outlet temperature and return temperature are normal.
E118	Fan 1 Speed Abnormal Fault	1.Check whether the PWM fan wiring is correct.
E119	Fan 2 Speed Abnormal Fault	1.Check whether the PWM fan wiring is correct.
E120	EC1 Communication Fault	1.Check whether the communication cable is normal and well connected.
E121	EC1 Fault	1.Check whether the communication cable is normal and well connected.
E122	EC2 Communication Fault	1.Check whether the communication cable is normal and well connected.
E123	EC2 Fault	1.Check whether the communication cable is normal and well connected.

Error code	Error name	Review and resolve
E124	Inverter Board Communication Fault	1.Check whether the communication cable is normal and well connected.
E125	Inverter Board Fault	1.Please contact your supplier to cooperate in handling this matter.
E126	Inverter Model Setting Protection	This fault message will appear during the initial connection to the inverter. If the fault does not resolve automatically, re-power the unit. If the fault persists, the inverter board does not contain the corresponding compressor model.
E127	EVI Inlet Temp. Sensor Fault	1.Check whether the sensor is connected normally 2.Check whether the sensor is normal
E128	EVI Outlet Temp. Sensor Fault	1.Check whether the sensor is connected normally 2.Check whether the sensor is normal
E129	Refrigerant Gas Side Temp. Sensor Fault	1.Check whether the sensor is connected normally 2.Check whether the sensor is normal
E130	Refrigerant Liquid Side Temp. Sensor Fault	1.Check whether the sensor is connected normally 2.Check whether the sensor is normal
E131	High Evaporation Temp. Protection	1.Check high-pressure value 2.Check if the temperature after the EEV is normal
E133	MPPT1 Fault	1.Check whether the MPPT is normal
E134	MPPT2 Fault	1.Check whether the MPPT is normal
E161	Ambient Temp. Sensor Fault	1.Check whether the sensor is connected normally 2.Check whether the sensor is normal
E162	Cascade Communication Fault	1.Check the cascaded communication wiring 2.Check the DIP switch settings for the address
E163	EEPROM Data Error	1.Initialize all parameters 2.If the issue is not resolved after initialization, contact your supplier
E164	Auxiliary Electric Heater Overload Protection	1.Check whether the wiring for auxiliary electric heater is normal.
E165	Overload Protection	1.Check whether the overload signal input status is normal.
E166	Plate Heat Exchanger Outlet Water Temp. Too Low	1.Check whether the plate heat exchanger outlet temperature and return temperature are normal.
E167	Plate Heat Exchanger Outlet Water Temp. Too High	1.Check whether the plate heat exchanger outlet temperature and return temperature are normal.
E168	Plate Heat Exchanger Outlet Temp. Sensor Fault	1.Check whether the sensor is connected normally 2.Check whether the sensor is normal
E169	Insufficient Water Flow Protection	1.Check whether the corresponding input of the mainboard is closed.

Error code	Error name	Review and resolve
E171	Plate Heat Exchanger Inlet Temp. Sensor Fault	1.Check whether the sensor is connected normally 2.Check whether the sensor is normal
E172	Total Outlet Temp. Sensor Fault	1.Check whether the sensor is connected normally 2.Check whether the sensor is normal
E174	Plate Heat Exchanger Inlet/Outlet Temp. Difference Large Protection	1.Check whether the inlet and outlet water temperature sensors of the plate heat exchanger are normal. 2.Check water flow rate, air flow rate, etc.
E175	Plate Heat Exchanger Inlet/Outlet Temp. Difference Abnormal Protection	1.Check whether the inlet and outlet water temperature sensors of the plate heat exchanger are normal. 2.Check water flow rate, air flow rate, etc.
E176	Inverter Water Pump Alarm	1.80%: Not operating at its best
E177	Communication Fault	1.Check the cascaded communication wiring 2.Check the DIP switch settings for the addres
E178	Communication Fault Between Mainboard and Expansion Board	1.Check whether the communication cable is normal and well connected.
E179	Low Protocol Version Alarm	1.Upgrade Protocol Version
E180	Inverter Water Pump Fault	1.Check inverter water pump sub-faults 0%: Feedback signal short circuit 85%: Undervoltage/overvoltage/abnormal external water flow 90%: Other component failure/installation debris present/poor temperature 95%: Permanent damage fault 100%: Feedback signal open circuit 2.Control mode selection error
E181	Abnormal Device Configuration	1.Check the DIP switch settings for the model.
E182	R290 Sensor Fault	1.Check the wiring of the R290 sensor 2.Check if the R290 sensor is normal
EE183	R290 Leak Alarm	1.Contact your supplier to handle this.
E184	Flow Sensor Fault	1.Check the wiring of the flow sensor.
E185	Model configuration failed	1.Check the model parameters
E186	Communication abnormal in indoor and outdoor units	1.Check whether the power supply to the outdoor unit's mainboard is normal.
Er.ocb(1)	Overcurrent During Inverter Board Startup Protection	1.Check the compressor model and parameters 2.Wait until the compressor has completely stopped before restarting; 3.Check if the UVW output wires are shorted 4.Contact your supplier for assistance

Error code	Error name	Review and resolve
Er.ocA(2)	Overcurrent Protection for Inverter Board Acceleration Operation	1.Check the compressor model and parameters 2.Check if the input power supply is normal 3.Select a higher-rated power inverter 4.Extend the acceleration time
Er.ocd(3)	Overcurrent Protection for Inverter Board Deceleration Operation	1.Check the compressor model and parameters 2.Select a higher-rated power inverter 3.Extend the deceleration time
Er.ocn(4)	Overcurrent Protection for Inverter Board Constant-Speed Operation	1.Check the compressor model and parameters 2.Check if the input power supply is normal 3.Check the load status 4.Select a higher-rated power inverter
Er.ouA(5)	Overvoltage Protection for Inverter Board Acceleration Operation	1.Check the compressor model and parameters 2.Wait until the compressor has completely stopped before restarting; 3.Check the input power supply
Er.oud(6)	Overvoltage Protection for Inverter Board Deceleration Operation	1.Check the input power supply 2.Check the compressor model and parameters 3.Extend the deceleration time
Er.oun(7)	Overvoltage Protection for Inverter Board Constant-Speed Operation	1.Check the input power supply 2.Check the compressor model and parameters 3.Extend the deceleration time
Er.ouE(8)	Overvoltage Protection for Inverter Board During Standby	1.Check the input power supply 2.Contact your supplier for assistance
Er.dcL(9)	Undervoltage Protection for Inverter Board During Operation	1.Check if the input power supply is normal. 2.Check if the wiring of power supply is normal.
Er.PLI(10)	Input Phase Loss Protection for Inverter Board	1.Check installation wiring 2.Check input voltage 3.Adjust parameters to eliminate oscillation
Er.PLo(11)	Output Phase Loss Protection for Inverter Board	1.Check output wiring 2.Check motor and cables
Er.FoP(12)	Protection of inverter power devices	1.Check the compressor model and parameters 2.Rewire 3.Add output reactors or filters 4.Contact your supplier for assistance
Er.oHI(13)	Inverter Board Overheat Protection	1.Lower the ambient temperature 2.Contact your supplier for assistance 3.Clean the air ducts or replace the fan 4.Check the load or select a higher-power inverter
Er.oLI(14)	Inverter Board Overload Protection	1.Check the fan, air duct, and ambient temperature 2.Extend the acceleration time 3.Check the input voltage 4.Check the compressor model and parameters

Error code	Error name	Review and resolve
Er.oLL(15)	Inverter Motor Overload Protection	1.Check the compressor model and parameters 2.Check the input voltage
Er.EEF(16)	PFC Start Failed on Inverter Board	1.Check the input voltage 2.Disconnect power for several minutes, then reconnect and restart 3.Contact your supplier for assistance
Er.oLP(17)	Inverter Motor Overload Protection	1.Check the compressor model and parameters
Er.ULd(18)	Inverter Motor Overspeed Protection	1.The compressor phase sequence is reversed or the compressor is not connected. 2.Check the compressor model and parameters
Er.Co1(19)	Inverter Board D-Axis Overcurrent Protection	1.Check the compressor model and parameters 2.Stop the unit for several minutes, then restart it 3.Contact your supplier for assistance 4.Check the motor stator resistance 5.Replace the motor
Er.Co2(20)	Inverter Board Q-Axis Overcurrent Protection	1.Check the compressor model and parameters 2.Stop the unit for several minutes, then restart it 3.Contact your supplier for assistance 4.Check the motor stator resistance 5.Replace the motor
Er.EEP(21)	Inverter board parameter storage failed	1.Disconnect power for several minutes, then reconnect and restart 2.Contact your supplier for assistance
Er.CFE(22)	Inverter Board Communication Fault	1.Check the wiring between the main board and the inverter board 2.Check the communication parameters
Er.ccF(23)	Inverter Board Current Detection Fault	1.Disconnect power for several minutes, then reconnect and restart 2.Contact your supplier for assistance
Er.ArF(24)	Inverter Board PFC Temp. Fault	1.Disconnect power for several minutes, then reconnect and restart 2.Contact your supplier for assistance
Er.Aco(25)	Inverter Board Start Motor Locked-Rotor Protection	1.Check the compressor model and parameters 2.Stop the unit for several minutes, then restart it 3.Contact your supplier for assistance 4.Check the motor stator resistance 5.Replace the motor 6.Check motor load
Er.PGo(26)	Inverter Board Running Motor Locked-Rotor Protection	1.Check the compressor model and parameters 2.Stop the unit for several minutes, then restart it 3.Contact your supplier for assistance 4.Check the motor stator resistance 5.Replace the motor 6.Check motor load

Error code	Error name	Review and resolve
Er.rHo(27)	Inverter Board Heat Dissipation Temp. Fault	1.Disconnect power for several minutes, then reconnect and restart 2.Contact your supplier for assistance
Er.Abb(28)	Inverter Board Out of Speed Fault	1.Check the compressor model and parameters
Er.Io1(29)	Inverter Board Interrupt Fault 1	1.Contact your supplier for assistance
Er.Io2(30)	Inverter Board Interrupt Fault 2	1.Contact your supplier for assistance
Er.PnL(31)	Starting Rotor Vibration Over-limit Protection	1.Check the compressor model and parameters 2.Stop the unit for several minutes, then restart it 3.Contact your supplier for assistance 4.Check the motor stator resistance 5.Replace the motor 6.Check motor load
Er.rr1(32)	Operating Rotor Vibration Over-limit Protection	1.Check the compressor model and parameters 2.Stop the unit for several minutes, then restart it 3.Contact your supplier for assistance 4.Check the motor stator resistance 5.Replace the motor 6.Check motor load
Er.PF1(33)	Inverter Board PFC Overcurrent Protection	1. Check the input power supply 2. Check whether the PFC inductor leads or inductor coil are shorted 3. Contact your supplier for assistance
Er.PF2(34)	PFC Overcurrent Protection	1. Check the input power supply 2. Check whether the PFC inductor leads or inductor coil are shorted 3. Contact your supplier for assistance
Er.PF2(35)	PFC Effective Current Overload Protection	1. Check the input power supply 2. Check the mechanical system, compressor refrigerant, etc. 3. Contact your supplier for assistance
Er.Seq (36)	Input Power Phase Incorrect Fault	1.Check the input power supply and wiring. 2.Disconnect power for several minutes, then reconnect and restart 3.Contact your supplier for assistance
Er.FmA (37)	Input Power Frequency Too High Protection	1.Check the input power supply and wiring. 2.Disconnect power for several minutes, then reconnect and restart 3.Contact your supplier for assistance
Er.Fmi (38)	Input Power Frequency Too Low Protection	1.Check the input power supply and wiring. 2.Disconnect power for several minutes, then reconnect and restart 3.Contact your supplier for assistance
Er.AcH (39)	Input Power Overvoltage Protection	1.Check the input power supply and wiring. 2.Disconnect power for several minutes, then reconnect and restart 3.Contact your supplier for assistance

Error code	Error name	Review and resolve
Er.AcL (40)	Input Power Undervoltage Protection	1.Check the input power supply and wiring. 2.Disconnect power for several minutes, then reconnect and restart 3.Contact your supplier for assistance
Er.Invt(41)	Input Three-Phase Voltage Distortion Protection	1.Check the input power supply and wiring. 2.Disconnect power for several minutes, then reconnect and restart 3.Contact your supplier for assistance
Er.Invt(42)	Output Power Overvoltage Protection	1.Check the input power supply and wiring. 2.Disconnect power for several minutes, then reconnect and restart 3.Contact your supplier for assistance
Er.Invt(43)	Charging Circuit Abnormal Protection	1.Check the input power supply and wiring. 2.Disconnect power for several minutes, then reconnect and restart 3.Contact your supplier for assistance
Er.Invt(44)	TASK2 Overflow Fault	1.Contact your supplier for assistance
Er.Invt(45)	TASK2 Operational Fault	1.Contact your supplier for assistance

9 Decommissioning

9.1 Temporarily decommissioning the product

Turn off all disconnectors in the building that the product is connected to.
Protect the heating installation from frost.

9.2 Permanently decommissioning the product

Have a qualified individual permanently decommission the product.

10 Recycling and Disposal

10.1 Disposing of the packaging

The qualified individual who installed the product is responsible for disposing of the packaging.

10.2 Disposing of the product



If the product is labeled with this mark:
- In such cases, do not dispose of the product with household waste.
- Instead, return it to a collection centre for waste electrical or electronic equipment.

10.3 Disposing of batteries



If the product contains batteries that are labeled with this mark:
- In this case, dispose of the batteries at a collection point for batteries.

Prerequisite: The batteries can be removed from the product without causing any destruction. Otherwise, the batteries are disposed of together with the product.
- In accordance with the legal regulations, used batteries must be returned since batteries may contain substances

10.4 Deleting personal data

Personal data could be misused by unauthorized third parties. If the product contains personal data:
- Before disposing of the product, ensure there is no personal data on or within it (e.g., online login credentials or similar).

The product is filled with R290 refrigerant.
- Refrigerant must be disposed of solely by an authorized, qualified individual.
- Adhere to the general safety information.

Appendix 1

Table 1 Heating Low-Temp. Curve (Heating Ambient Temp. - Target Temp. Table) Unit: ℃

Ambient Temp.	≤-20	-19	-18	-17	-16	-15	-14	-13	-12	-11	-10	9	-8	-7	-6	-5	-4	-3	-2	-1	0
Low-Temperature Curve 1	38	38	38	38	38	37	37	37	37	37	37	36	36	36	36	36	36	35	35	35	35
Low-Temperature Curve 2	37	37	37	37	37	36	36	36	36	36	36	35	35	35	35	35	35	34	34	34	34
Low-Temperature Curve 3	36	36	36	35	35	35	35	35	35	34	34	34	34	34	34	33	33	33	33	33	33
Low-Temperature Curve 4	35	35	35	34	34	34	34	34	34	33	33	33	33	33	33	32	32	32	32	32	32
Low-Temperature Curve 5	34	34	34	33	33	33	33	33	33	32	32	32	32	32	32	31	31	31	31	31	31
Low-Temperature Curve 6	32	32	32	32	31	31	31	31	31	31	31	31	30	30	30	30	30	30	30	30	29
Low-Temperature Curve 7	31	31	31	31	30	30	30	30	30	30	30	30	29	29	29	29	29	29	29	29	28
Low-Temperature Curve 8	29	29	29	29	28	28	28	28	28	28	28	28	27	27	27	27	27	27	27	27	26
AT	**1**	**2**	**3**	**4**	**5**	**6**	**7**	**8**	**9**	**10**	**11**	**12**	**13**	**14**	**15**	**16**	**17**	**18**	**19**	**≥20**	
Low-Temperature Curve 1	35	35	34	34	34	34	34	34	33	33	33	33	33	33	32	32	32	32	32	32	
Low-Temperature Curve 2	34	34	33	33	33	33	33	33	32	32	32	32	32	32	31	31	31	31	31	31	
Low-Temperature Curve 3	32	32	32	32	32	32	31	31	31	31	31	31	30	30	30	30	30	30	29	29	
Low-Temperature Curve 4	31	31	31	31	31	31	30	30	30	30	30	30	29	29	29	29	29	29	28	28	
Low-Temperature Curve 5	30	30	30	30	30	30	29	29	29	29	29	29	28	28	28	28	28	28	27	27	
Low-Temperature Curve 6	29	29	29	29	29	29	28	28	28	28	28	28	27	27	27	27	27	27	26	26	
Low-Temperature Curve 7	28	28	28	28	28	28	27	27	27	27	27	27	26	26	26	26	26	26	25	25	
Low-Temperature Curve 8	26	26	26	26	26	26	26	25	25	25	25	25	25	25	25	24	24	24	24	24	

Table 2 Heating High-Temp. Curve (Heating Ambient Temp. - Target Temp. Table) Unit: ℃

Ambient Temp.	≤ -20	-19	-18	-17	-16	-15	-14	-13	-12	-11	-10	9	-8	-7	-6	-5	-4	-3	-2	-1	0
High-Temp. Curve 1	55	55	55	55	54	54	54	54	54	54	54	54	53	53	53	53	53	53	53	53	52
High-Temp. Curve 2	53	53	53	53	52	52	52	52	52	52	52	52	51	51	51	51	51	51	51	51	50
High-Temp. Curve 3	52	52	52	52	51	51	51	51	51	51	51	51	50	50	50	50	50	50	50	50	49
High-Temp. Curve 4	50	50	50	50	49	49	49	49	49	49	49	49	48	48	48	48	48	48	48	48	47
High-Temp. Curve 5	48	48	48	48	47	47	47	47	47	47	47	47	46	46	46	46	46	46	46	46	45
High-Temp. Curve 6	45	45	45	45	44	44	44	44	44	44	44	44	43	43	43	43	43	43	43	43	42
High-Temp. Curve 7	43	43	43	43	42	42	42	42	42	42	42	42	41	41	41	41	41	41	41	41	40
High-Temp. Curve 8	40	40	40	40	39	39	39	39	39	39	39	39	38	38	38	38	38	38	38	38	37

Ambient Temp.	1	2	3	4	5	6	7	8	9	10	11	12	13	14	15	16	17	18	19	≥ 20	
High-Temp. Curve 1	52	52	52	52	52	52	52	51	51	51	51	51	51	51	51	50	50	50	50	50	
High-Temp. Curve 2	50	50	50	50	50	50	50	49	49	49	49	49	49	49	49	48	48	48	48	48	
High-Temp. Curve 3	49	49	49	49	49	49	49	48	48	48	48	48	48	48	48	47	47	47	47	47	
High-Temp. Curve 4	47	47	47	47	47	47	47	46	46	46	46	46	46	46	46	45	45	45	45	45	
High-Temp. Curve 5	45	45	45	45	45	45	45	44	44	44	44	44	44	44	44	43	43	43	43	43	
High-Temp. Curve 6	42	42	42	42	42	42	42	41	41	41	41	41	41	41	41	40	40	40	40	40	
High-Temp. Curve 7	40	40	40	40	40	40	40	39	39	39	39	39	39	39	39	38	38	38	38	38	
High-Temp. Curve 8	37	37	37	37	37	37	37	36	36	36	36	36	36	36	36	35	35	35	35	35	

Heating curve 9 is an automatically generated curve (a linear curve created by setting parameters), calculated as follows:

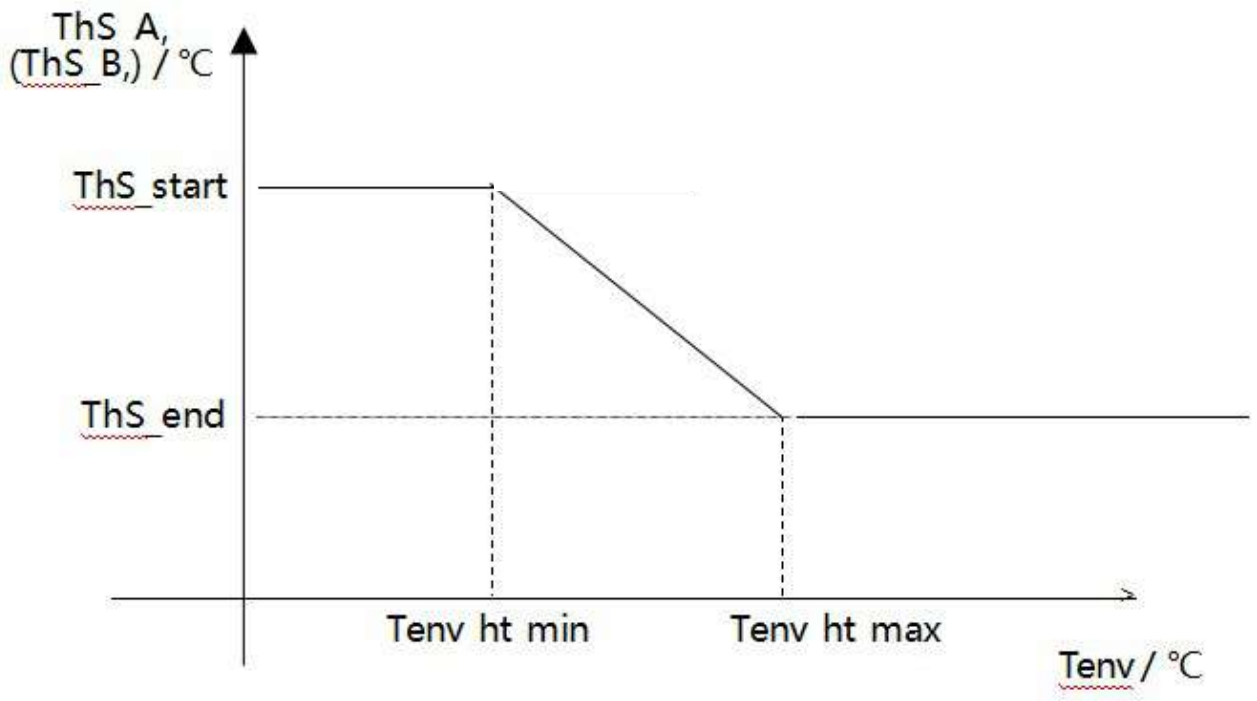

Among these，

Tenv_ht_max: MAX([Heating Ambient Temperature Compensation 1 for Curve 9], [Heating Ambient Temperature Compensation 2 for Curve 9])

Tenv_ht_min: MIN([Heating Ambient Temperature Compensation 1 for Curve 9], [Heating Ambient Temperature Compensation 2 for Curve 9])

ThS_end: MIN([Heating Outlet Water Temperature 2 for Curve 9], [Heating Outlet Water Temperature 1 for Curve 9])

ThS_start: MAX([Heating Outlet Water Temperature 2 for Curve 9], [Heating Outlet Water Temperature 1 for Curve 9])

Note: MAX(A,B) denotes the larger value between A and B;

MIN(A,B) denotes the smaller value between A and B.

Table 3 Cooling Low-Temperature Curve (Cooling Ambient Temperature - Target Temperature Table) Unit: °C

Ambient Temp.	-10≤TA<15	15≤TA<22	22≤TA<30	30≤TA
Low-Temperature Curve 1	16	11	8	5
Low-Temperature Curve 2	17	12	9	6
Low-Temperature Curve 3	18	13	10	7
Low-Temperature Curve 4	19	14	11	8
Low-Temperature Curve 5	20	15	12	9
Low-Temperature Curve 6	21	16	13	10
Low-Temperature Curve 7	22	17	14	11
Low-Temperature Curve 8	23	18	15	12

Table 4 Cooling High-Temperature Curve (Cooling Ambient Temperature - Target Temperature Table) Unit: °C

Ambient Temp.	-10≤TA<15	15≤TA<22	22≤TA<30	30≤TA
High-Temp. Curve 1	20	18	17	16
High-Temp. Curve 2	21	19	18	17
High-Temp. Curve 3	22	20	19	17
High-Temp. Curve 4	23	21	19	18
High-Temp. Curve 5	24	21	20	18
High-Temp. Curve 6	24	22	20	19
High-Temp. Curve 7	25	22	21	19
High-Temp. Curve 8	25	23	21	20

Cooling Curve 9 is an automatically generated curve (a linear curve created by setting parameters), calculated as follows:

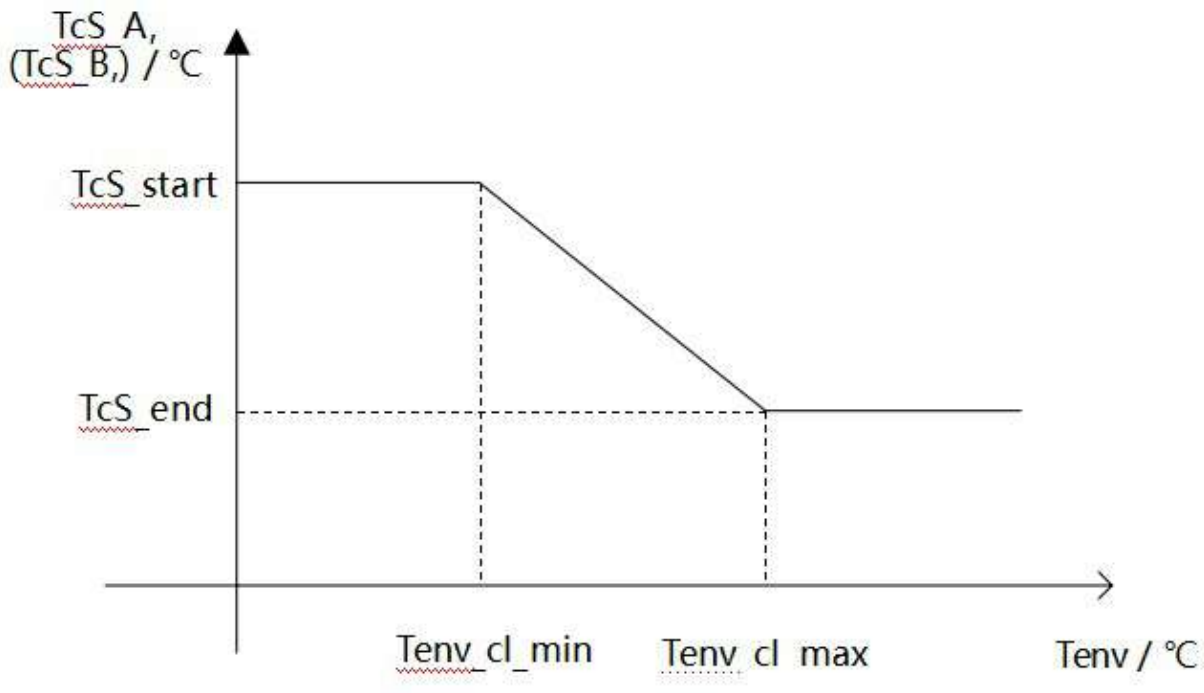

Among these,

Tenv_cl_max: MAX([Cooling Ambient Temperature Compensation 1 for Curve 9], [Cooling Ambient Temperature Compensation 2 for Curve 9])

Tenv_cl_min: MIN([Cooling Ambient Temperature Compensation 1 for Curve 9], [Cooling Ambient Temperature Compensation 2 for Curve 9])

TcS_end: MIN([Cooling Outlet Water Temperature 1 for Curve 9], [Cooling Outlet Water Temperature 2 for Curve 9])

TcS_start: MAX([Cooling Outlet Water Temperature 2 for Curve 9], [Cooling Outlet Water Temperature 1 for Curve 9])

Note: MAX(A,B) denotes the larger value between A and B;

MIN(A,B) denotes the smaller value between A and B.

Note:

iGarden

Thank you for choosing our ATW Heat Pump.